California Solar Permitting Guidebook

Improving Permit Review
and Approval for Small Solar Systems

Winter 2017
Third Edition
(Updated)

Developed by:
Solar Permitting Task Force
Governor's Office of Planning and Research
Office of Governor Edmund G. Brown Jr.

California Solar Permitting Guidebook

Improving Permit Review and Approval for Small Solar Systems

Governor's Office of Planning and Research
Office of Governor Edmund G. Brown Jr.

Project Managers
Sandy Goldberg, Governor's Office of Planning and Research
Samuel Diaz, Governor's Office of Planning and Research

Lead Contributors

California Building Standards Commission
California Department of Housing and Community Development
California State Fire Marshal
California Solar Energy Industries Association (CALSEIA)
City of Los Angeles
Mar Structural Design
Center for Sustainable Energy

Published Winter 2017
Third Edition (updated)

TABLE OF CONTENTS

PREFACE 4
ACKNOWLEDGMENTS 5
PURPOSE AND USE OF THIS GUIDE 6

Part 1 **CURRENT LAWS, REGULATIONS AND CODES 8**

State Code Requirements 8
Limits on Local Modifications 9
Permit Fees 11

Part 2 **THE PROJECT APPROVAL PROCESS 13**

Permit Application and Plan Review 13
Site Inspection 16
Local Utility Approval (Solar PV systems only) 17

Part 3 **RECOMMENDATIONS FOR EXPEDITED PERMITTING FOR SMALL PV SYSTEMS 19**

PV Toolkit for Local Governments 22
1) Submittal Requirements Bulletin — Solar Photovoltaic Installations 10 kW or Less 23
2) Eligibility Checklist for Expedited Solar Photovoltaic Permitting 26
3) Solar PV Standard Plan — Simplified Central/String Inverter Systems 27
4) Solar PV Standard Plan — Simplified Microinverter and ACM Systems 45
5) Structural Criteria for Residential Rooftop Solar Energy Installations 51
6) MOU Regarding Solar Photovoltaic Plan Review and Inspection Services 61
7) Inspection Guide for PV Systems 63

Part 4 **RECOMMENDATIONS FOR EXPEDITED SOLAR WATER HEATING INSTALLATIONS 71**

SWH Toolkit for Local Governments 74
1A) Submittal Requirements Bulletin — Solar Domestic Water Heating Installations 30 kWth or Less 75
1B) Submittal Requirements Bulletin — Solar Pool Heating Installations 30 kWth or Less 77
2A) Eligibility Checklist for Expedited Solar Domestic Water Heating Permitting 79
2B) Eligibility Checklist for Expedited Solar Pool Heating Permitting 80
3A) Solar Domestic Water Heating Standard Plan 81
3B) Solar Pool Heating Standard Plan 82
4) Structural Criteria for Residential Rooftop Solar Energy Installations 85
5A) Inspection Guide for SDWH Systems 95
5B) Inspection Guide for Solar Pool Heating Systems 92

Part 5 **RESOURCES AND INFORMATION 93**

Understanding the Code 93
Code Requirements for Solar Photovoltaic (PV) Systems 93
Code Requirements for PV on Buildings other than One- and Two-Family Dwellings 98
Code Requirements for Solar Water Heating (SWH) Systems 107
Glossary 110
Additional Resources 112

PREFACE

California is a world leader in renewable energy generation. Solar and wind power, as well as emerging technologies such as biomass and fuel cells, are transforming California. Renewable energy is helping to power the state's economy, reducing our state's reliance on imported energy sources and decreasing air pollution.

California's state and local governments have set aggressive goals to expand renewable energy. In 2011, California adopted a Renewable Portfolio Standard (RPS) requiring that at least one-third of the state's electricity come from clean energy sources by 2020. California's RPS began in 2002 as a 20 percent requirement by 2017 and increasingly became more aggressive with requirements for 20 percent by 2010 (set in 2006) and 33 percent by 2020 (set in 2011), and 50 percent by 2030 (set in 2015). The Clean Energy and Pollution Reduction Act of 2015 (De León, Chapter 547, Statutes of 2015) (Senate Bill 350) put into law a requirement to serve 50 percent of California's electricity use with renewable resources by 2030. Many local governments also have their own targets for renewable energy. Additionally, Governor Edmund G. Brown Jr. has set a specific goal of developing 12,000 megawatts of small-scale, localized renewable electrical power (often called "distributed generation") in California by 2020. California is a clean energy leader with an aggressive Renewables Portfolio Standard (RPS).

Small-scale renewable energy benefits California communities. It increases energy reliability for residents and businesses by generating electricity near where it is consumed. This type of energy can also provide stable electricity prices for consumers and creates thousands of jobs across California.

In order to expand small-scale renewable energy across California, Governor Brown instructed the Governor's Office of Planning and Research (OPR) to help remove barriers to its development. One such barrier is the patchwork of permitting requirements for small solar installations throughout the state. Solar energy systems have been installed in California for decades, and their technology, as well as the methods to install and maintain them, is well established. As a result, permitting for these small and simple solar projects should be as simple and standardized as possible.

The first California Solar Guidebook was published in 2012, the result of a collective effort of stakeholders from local government, the building industry, professional associations, solar companies, utility providers and state regulatory agencies. Many local permitting agencies adopted practices and standard documents outlined in the Guidebook. These practices made installing solar less expensive and increased expansion of this technology in California.

Despite these improvements, however, costs to permit solar are still higher than necessary. Increased solar adoption has inundated many jurisdictions with permit applications and inspection requests. Solar technologies have changed, new laws have been passed and codes have been revised. This second edition of the Guidebook addresses those changes, improves upon the recommended process for expedited permitting of solar PV systems, and adds information about solar water heating systems.

[This Page Intentionally
Left Blank]

PURPOSE AND USE OF THIS GUIDE

This Guidebook is designed to help local governments and their permitting agencies improve permitting of small solar energy systems. It is also designed to help building owners and solar installers navigate permitting as efficiently as possible. Practices recommended in this Guidebook apply to permitting agencies of all sizes. The Guidebook is also written for permit applicants with all levels of expertise.

The Guidebook is organized into five main sections.

Part 1 — **CURRENT LAWS, REGULATIONS AND CODES**: This section explains current legal requirements for solar installations in California.

Part 2 — **THE PROJECT APPROVAL PROCESS**: This section describes important aspects of permit review and project inspection.

Part 3, Part 4 — **RECOMMENDATIONS FOR EXPEDITED LOCAL SOLAR PERMITTING**: These sections recommend a streamlined local permitting process for small, simple solar PV and solar water heating installations (including both solar domestic water heating [SDWH] and solar pool heating [SPH]) and provide standard forms that can be used to streamline permitting.

Part 5 — **RESOURCES AND INFORMATION**: This section provides informational materials that can help local governments clarify current state requirements for all solar installations.

The Guidebook concludes with a glossary of terms and a list of helpful information sources for local governments and permit applicants.

This Guidebook focuses on the permit review and approval to install a rooftop solar system. It does not address zoning, land use approvals or environmental review that may be required for larger solar projects.

This Guidebook addresses both solar photovoltaic (PV) and solar water heating (SWH) technologies. These technologies have many fundamental similarities, as well as several important differences. Where requirements are discussed that apply to only one of these technologies, the text will note this.

In the course of the Guidebook, several types of solar installation are discussed, including systems on residential and commercial building rooftops, in parking lots and on parking structures and mounted on the ground. It is important to note that each installation type has a certain set of installation requirements. In addition, rooftop installations have some differing requirements depending on whether they are installed on a commercial or residential building.

The toolkit sections of this Guidebook recommend an expedited permitting process for simple PV systems 10 kilowatts (kW) or less and a process for SWH systems 30 kilowatts thermal (kWth) or less. An expedited permitting process refers to streamlining the permit process for simple, typical solar installations so that permits can be issued in an "over-the-counter" or similar manner.

This Guidebook uses the terms expedited and streamlined synonymously. These thresholds capture approximately 90% of the solar systems that are currently being installed. Above this size threshold, a system's design considerations become more complex.

Assembly Bill 2188 (2014, Muratsuchi) requires jurisdictions to adopt an expedited permitting process that "substantially conforms" with that laid out in Parts 3 and 4 of this Guidebook. Jurisdictions may modify these documents as specified and should review these sections of the Guidebook for a more detailed discussion of this process.

An electronic version of this Guidebook that includes clickable links to Internet resources can be found on the websites of several California entities: **The Governor's Office of Planning and Research**, **California Building Standards Commission**, **Office of the State Fire Marshal**, **California Department of Housing and Community Development** and **Center for Sustainable Energy**.

Part 1

CURRENT LAWS, REGULATIONS AND CODES

State Code Requirements

California's state building codes provide uniform requirements for buildings throughout the state. These requirements are contained in Title 24 of the California Code of Regulations (CCR). The CCR is divided into 28 separate titles based on subject matter or state agency authority. Title 24 is the 24th title within the CCR and is reserved for state regulations that govern the design and constructions of buildings, associated facilities and equipment. These regulations are also known as the state's "building standards."

Title 24 applies to all building occupancies and related features and equipment throughout the state. It contains requirements for a building's structural, mechanical, electrical and plumbing systems, in addition to measures for energy conservation, sustainable construction, maintenance, fire and life safety and accessibility. A common misunderstanding is that Title 24 relates only to energy conservation or accessibility requirements. In fact, it covers a much wider range of requirements for buildings. Specific areas within Title 24 identify certain requirements for solar PV installations such as the California Electrical Code, California Building Code, California Plumbing Code, California Mechanical Code and California Residential Code (which applies to residential buildings of one or two units).

State regulations should not be confused with state laws enacted through the legislative process. State regulations are adopted by state agencies where necessary to implement, clarify and specify requirements of state law. The California Building Standards Commission and the other state adopting agencies review the codes and update Title 24 as appropriate. Title 24 is updated every 18 months with a model code update every three years.

Several portions of Title 24 govern installation of a solar energy system.

California Building Code, Title 24, Part 2
California Residential Code, Title 24, Part 2.5(One- and Two-family dwellings)
California Electrical Code, Title 24, Part 3
California Mechanical Code, Title 24, Part 4
California Plumbing Code, Title 24, Part 5
California Energy Code, Title 24, Part 6
California Fire Code, Title 24, Part 9

The intent of this Guidebook is to provide consistent interpretation of these Title 24 requirements throughout the state. This Guidebook is not intended to create, explicitly or implicitly, any new requirements.

While current Title 24 requirements establish several legal standards for installation of solar energy installations, Title 24 may be amended through the state's code update process to further clarify requirements for solar PV installations or SWH systems. Updated information regarding new code requirements, as well as the code updating process, is available on the **California Building Standards** website at **www.bsc.ca.gov**.

Tentative Interim Amendments *(New to the Winter 2017 Update)*

The National Fire Protection Association (NFPA) administers the development of NFPA 70, the National Electrical Code (NEC), which serves as the base model code for the California Electrical Code (CEC), Part 3 of Title 24, California Code of Regulations. NFPA also issues Tentative Interim Amendments (TIA's) for approved code amendments of a technical and emergency nature. Four TIA's directly related to PV systems have been issued by NFPA for the 2014 NEC. These TIA's were not part of the originally adopted 2016 CEC.

For local government to enforce the provisions of these TIA's it is necessary to enact a local ordinance pursuant to Article 89.101.8 of the CEC. Alternatively, Article 90, Section 90.4 Enforcement, of the CEC permits the authority having jurisdiction to waive specific requirements in this code or permit alternative

methods, including provisions of a TIA, where it is assured that equivalent objectives can be achieved by maintaining effective safety.

The four NEC TIA's and local ordinance adoption information are identified in the California Building Standards Commission's Information Bulletin 16-03 which may be accessed at the following location: http://www.bsc.ca.gov/pubs/bullet.aspx. These TIA's are available on the NFPA website www.nfpa.org.

Limits on Local Modifications

Building Codes

Cities and counties in California are required by state law to enforce Title 24 building standards. However, cities and counties may adopt local laws (also called "ordinances") to modify these state building standards under limited circumstances because of local climatic, geological or topographical conditions. This limited

allowance means that a city or county may have local ordinances that modify or add to the provisions of Title 24 for solar systems. The **California Building Code (Sections 1.1.8 and 1.1.8.1)** outlines the specific findings that a city or county must make for each amendment, addition or deletion to the state building codes.

Cities, counties and local fire departments file these local amendments to the state building code with the California Building Standards Commission. Findings that are prepared by fire protection districts must be ratified by the local government and are then filed with the California Department of Housing and Community Development.

PLANNING AND ZONING REQUIREMENTS

California's cities and counties have authority to adopt laws that govern local land use. Local governments typically enforce their own general plans and other comprehensive plans that guide development in their communities and then adopt local ordinances and zoning regulations to enforce these plans.

Local governments generally can adopt local laws regarding where certain land uses, such as large commercial energy generation, can be located within their communities. A more detailed conversation regarding land use and zoning for solar projects is addressed in a 2012 guide produced by the **California Planning Directors Association (CPDA)**, which is referenced in the Resources section of this Guidebook. This guide recommends several steps to streamline land use decisions regarding solar energy.

REQUIREMENT TO ADOPT AN EXPEDITED PERMITTING PROCESS FOR SMALL ROOFTOP SOLAR

Assembly Bill 2188 (Muratsuchi, 2014) requires local governments to adopt an administrative ordinance that creates a streamlined permitting process for small rooftop solar system installations on or before September 30, 2015. It also limits the number of inspections that may be required.

These requirements are applicable to solar energy systems that

1. Are no larger than 10 kilowatts alternating current nameplate rating or 30 kilowatts thermal
2. Conform to all applicable state fire, structural, electrical and other building codes as adopted or amended by the city, county or city and county and paragraph (3) of subdivision (c) of Section 714 of the Civil Code
3. Are installed on a single-family or duplex family dwelling
4. Do not exceed the maximum legal building height as defined by the authority having jurisdiction

The law also requires that this streamlined process "substantially conform" to the permitting process laid out in this Guidebook. See Parts 3 and 4 of this Guidebook for an explanation of this process.

Finally, the law sets limits on the cost and efficiency impacts that homeowner associations may have on proposed solar projects. The full text of this bill can be found **here**.

RESTRICTIONS TO LOCAL LIMITS ON SOLAR ENERGY

Where solar energy is generated for on-site use, state law clearly limits local governments' ability to unreasonably prohibit solar systems. The following state laws place limits on local regulation of solar energy systems.

California Solar Rights Act

The California Solar Rights Act is a state law, passed in 1979, that elevates the timely and cost-effective installation of solar energy systems as a matter of statewide importance. The law establishes the right of homeowners and businesses to access sunlight in order to generate solar energy, limits the ability of local governments and homeowner associations (HOAs) to prevent the installation of solar systems and prohibits a public entity from receiving state funding for solar energy programs if it unreasonably restricts the installation of solar energy systems.

The act's preamble provides the overarching intent of the act by stating:

> *It is the intent of the Legislature that local agencies not adopt ordinances that create unreasonable barriers to the installation of solar energy systems, including, but not limited to, design review for aesthetic purposes, and not unreasonably restrict the ability of homeowners and agricultural and business concerns to install*
> *solar energy systems. It is the policy of the state to promote and encourage the use of solar energy systems and to limit obstacles to their use. It is the intent of the Legislature that local agencies comply not only with the language of this section, but also the legislative intent to encourage the installation of solar energy systems by removing obstacles to, and minimizing costs of, permitting for such systems.*

The Solar Rights Act also requires that local governments use an administrative, nondiscretionary review process for on-site solar energy systems. As indicated above, no restrictions related to visual or aesthetic concerns are permitted. Section 65850.5 (c) of the act also prohibits local governments from denying a use permit for a solar energy system ". . . unless it makes written findings based upon substantial evidence in the record that the proposed installation would have a specific, adverse impact upon the public health or safety, and there is no feasible method to satisfactorily mitigate or avoid the specific, adverse impact. The findings shall include the basis for the rejection of potential feasible alternatives of preventing the adverse impact."

Specific requirements of the Solar Rights Act have been refined through a series of court cases in recent decades. For a more detailed understanding of specific legal requirements of this act, please consult a **report** completed by the Energy Policy Initiatives Center at the University of San Diego School of Law, which is detailed in the Resources section at the end of this Guidebook.

Requirements of the Solar Rights Act are contained in the following sections of California law: California Civil Code, Sections 714 and 714.1; California Civil Code, Sections 801 and 801.5; California Government Code, Section 65850.5; California Health and Safety Code Section 17959.1; California Government Code, Sections
66473.1 and 66475.3.

California's Solar Shade Control Act

California's Solar Shade Control Act, enacted in 1978, is a state law intended to protect solar systems from being shaded from sunlight by neighboring trees or buildings. A 2008 amendment of this act limits the application of this law to situations in which a neighbor receives a notice that a solar energy system will be installed that they might shade if they plant trees or remodel their building.

Requirements of the act are contained in California Public Resources Code, Sections 25980 through 25986.

CEQA Exemption for Certain Solar Installations

Senate Bill 226, passed in 2011, is a state law establishing that certain solar energy systems are exempt from environmental review under the California Environmental Quality Act (CEQA). To qualify under this statutory exemption, a solar energy project must be located either on the roof of an existing building or on an existing parking lot. SB 226 makes clear the legislative intent that rooftop and parking lot solar projects do not require in-depth environmental review.

This CEQA exemption is contained in Section 21080.35 of the Public Resources Code.

Permit Fees

Current state law requires that fees charged by a local enforcing agency for permit processing and inspection cannot exceed the reasonable cost of providing the service for which the fee is charged. In other words, fee revenue must only be used to defray the cost of permit processing and enforcement and cannot be used

for general revenue purposes. These requirements are contained in Government Code Section 65850.55, Government Code Section 66016 and State Health and Safety Code Section 17951.

Government Code Section 66015 further sets specific limits on the amount local enforcing agencies can charge for solar PV permit fees. Fees in excess of these limits must be explicitly justified and are prohibited unless the municipality determines that it has already adopted a streamlined permit approval process.

Permit Fee Limits for PV

Residential		Commercial	
15 kW or less	$500	50 kW or less	$1000
More than 15 kW	$500 + $15 per kW above 15	50 kW – 250 kW	$1000 + $7 per kW above 50 kW
		More than 250 kW	$2400 + $5 per kW above 250 kW

While some local governments have yet to comply with these laws, other local governments have reduced or even waived fees to install solar systems, recognizing the many benefits created by expansion of solar energy in their communities.

There is no state requirement for permit fees for solar water heating systems. However, a clear fee schedule should be provided that considers shorter counter time for issuing streamlined permits.

Part 2

THE PROJECT APPROVAL PROCESS

Securing approval for a solar energy project involves several basic steps. First, a permit application is submitted to a local permitting agency, known within government as the "enforcing agency" and reviewed by that agency. Typically, a permit is submitted on behalf of a building owner by the contractor installing the solar energy system. Once the permit application is approved, the applicant has permission to build the solar installation.

After the solar installation is constructed, it is inspected by the enforcing agency to ensure it complies with applicable building codes and local ordinances. Each of these steps is described in more detail below.

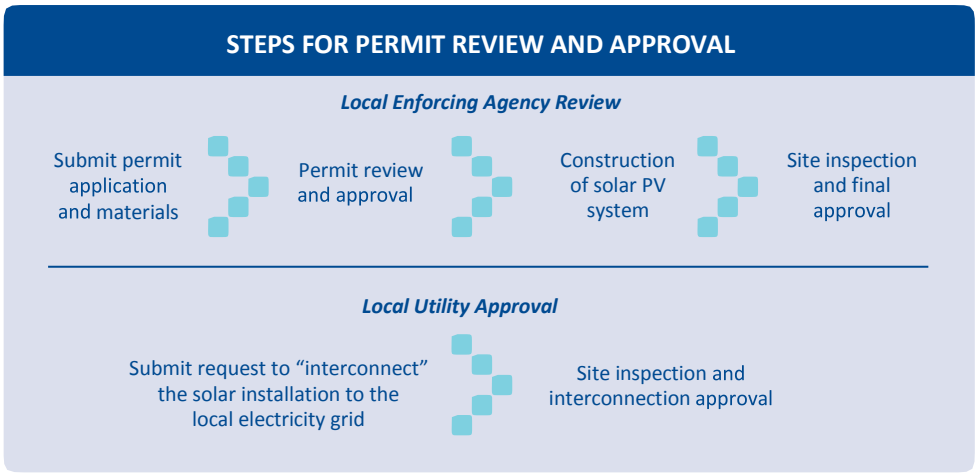

For solar PV installations, during the local agency project approval process the permit applicant should also contact the local utility provider to request permission to connect the solar installation to the local distribution grid. The solar PV system cannot be "turned on" until approval is granted by both the local agency and the local utility. Solar water heating systems do not require utility approval unless a grid-connected PV system is included (hybrid systems have both grid-connected PV and thermal energy collection).

Well-informed solar installers and knowledgeable, well-trained local agency staff are critical to achieve an efficient permit approval process. Please consult the Resources section of this Guidebook for information on training available to both solar contractors and agency staff. Effective training is one of the most important steps that local governments and the solar industry can take to ensure efficient permitting.

Permit Application and Plan Review

This section explains the permit review process for solar energy installations and common issues that must be addressed to minimize unexpected delays in the permit review process.

Enforcing Agency Review

The first step to build a solar installation requires applying for a permit to construct the installation from the local enforcing agency, which is most often the local building department. Each local enforcing agency is organized slightly differently, but all have an established process for receiving, reviewing and approving permits.

The local agency enforces all Title 24 requirements from the state as well as any local requirements on solar energy installations. In many cases, the local agency must interpret how state requirements apply to certain buildings. The enforcing agency must verify that the installation complies with structural requirements. For solar PV installations, the enforcing agency must verify that it meets electrical requirements and applicable fire safety ratings, and for SWH installations, the enforcing agency must verify that it meets plumbing and mechanical requirements. Each of these areas is discussed in detail.

Structural Requirements

Installation of a solar energy system on the roof of a structure adds weight to the structure, commonly referred to as "dead load." This additional weight must be accounted for to ensure that the building can safely bear the weight of the solar installation. In new construction, this additional load is usually addressed easily and at very little cost. Where a solar system is added to existing buildings, the cost and complexity of adding weight to the roof vary depending on the structure of the building and roof.

Solar panels also may impose loads generated by seismic forces and, in some areas, by snow accumulation. Solar panels must also resist wind forces.

The California Building Code and California Residential Code contain specific tables that determine the required size and spacing of structural support for a roof according to assumed design loads based on roof covering, roof slope and snow loads. These specific tables do not address structural support that is required for additional equipment on rooftops such as PV or SWH systems.

Roof structures are also designed to carry temporary construction loads, termed "roof live loads," in addition to the self-weight of the structure. Solar arrays, if installed close to the roof surface, displace roof live loads such as workers and bundles of shingles. This displacement of roof live load creates reserve load-bearing capacity that can be used to justify additional dead and wind loads from solar arrays. This approach is the basis of the Structural Toolkit on page 45 and 79 that enables "over-the-counter" permitting for prequalified systems without requiring project-specific structural calculations.

Building codes do provide design criteria that an engineer or architect can use to calculate the required structural support required for additional loads on rooftops, such as solar energy systems. The Solar Guidebook's Structural Toolkit suggests criteria for when a licensed engineer or architecture may need to be consulted when adding solar arrays to a roof structure and when a prequalified system does not require project-specific structural calculations. By reviewing a jurisdiction's expedited procedures, permit applicants can learn when the local enforcing agency specifically requires the services of a licensed engineer or architect to verify proposed plans for a solar energy system, and when the jurisdiction has an alternate method that waives such requirements.

Electrical Requirements (Solar PV systems only)

Individual components of solar PV systems must comply with the California Electrical Code. This requirement applies to several system components, including but not limited to the installation's panels, modules, wire, inverters, connectors and disconnects. The California Electrical Code requires these components in the solar PV system to be "identified and listed for the application." It is important to ensure that the solar system's components are listed within a product standard that covers the proposed use.

Currently, no complete system listings exist for solar installations, but rather system listings exist for a solar PV installation's individual components. Components that are identified and listed for solar PV installation application must be installed in accordance with both the California Electrical Code and the manufacturers' installation instructions. Solar PV systems that use components listed for the application and are properly designed and installed constitute a code-compliant system from an electrical standpoint.

In some circumstances, a professional electrical engineer may be required to design the electrical portion of the proposed solar PV system. The enforcing agency determines if this is necessary based on the complexity of the system. In many cases, an electrical engineer is not required, as licensed contractors are capable of completing the necessary sizing calculations and can specify the components needed to make smaller systems work safely and properly.

The California Electrical Code requires that portions of electrical systems, including solar PV systems, should only be accessed by qualified persons. This rule is intended to ensure that only people who have training or understand relevant hazards are allowed in certain areas of an electrical installation.

Plumbing and Mechanical Requirements (Solar Domestic Water Heating Systems)

Individual components of solar domestic water heating (SDWH) systems must comply with the California Building Standards Code, Title 24 as adopted by the California Building Standards Commission. This requirement applies to system components, including but not limited to the solar collectors, storage tank, controller, pump, heat exchanger, heat transfer fluid, piping and all temperature and pressure regulating components. SDWH systems for one- or two-family homes shall be certified by an accredited listing agency, as per California Government Code Section 65850.5 (f)(2).[1] Adopting a system certification will help local governments streamline permitting for small solar domestic water heating systems.

Plumbing and Mechanical Requirements (Solar Pool Heating Systems)

Individual collectors used in solar pool heating (SPH) systems are certified by accredited listing agencies. At the present time, certifications are not available for SPH systems.

Fire Classification, Safety and Roof Access and Pathway Requirements (Solar PV systems only)

Buildings in California may be required to have a fire resistant roof covering, depending on the type of construction, occupancy or geographical location of the building. The California Building and Residential Codes recognize three fire resistant roof ratings: Class A, B and C. These ratings are established through specific testing methods based on the ability of the roof covering to withstand fire that comes from a source on top of the roof structure. Roof materials with Class A fire resistance rating can withstand a high exposure to fire without allowing penetration or ignition of the structure, while Class B and C materials have lesser ability to withstand fire.

California statutorily requires all roof materials installed on buildings throughout the state to have a minimum Class C rating. Beginning in 2015, solar panels must have a fire resistant rating that conforms to the fire rating of the roof beneath.[2]

The installation of solar PV systems must also allow for fire department smoke ventilation operations. The California Building, Residential and Fire Codes outline the requirements for a roof access point and clear access pathways along the roof (for more detail on these requirements see the Code Bulletin in the Reference Toolkit). The installation of solar PV systems may be subject to additional provisions adopted by the local enforcing agency.

Fire Service Approval (Solar PV systems only)

Permits for solar PV installations are reviewed to ensure compliance with fire safety requirements. In many communities, the enforcing agency coordinates directly with the fire department to ensure fire safety of PV projects and the permit applicant does not have any direct contact with the fire department.

1 According to CA Government Code Sec. 65850.5 (f)(2), "Solar energy systems for heating water in single-family residences and solar collectors used for heating water in commercial or solar pool applications shall be certified by an accredited listing agency as defined by the California Plumbing and Mechanical codes." (CPC and CMC Section 214)

2 Other requirements for higher classification may apply. Also see California State Fire Marshal Bulletin 14-002 and addendum.

In some areas, the local fire authority is a fire district or special service district organized to provide fire services. Unlike a fire department, which is typically part of a city or county government, a fire district operates independently under the direction of a locally elected board. Many jurisdictions have established a memorandum of understanding between the local fire authority and the building official that allows the building official to determine and approve fire safety requirements.

In circumstances where the fire authority is separate from city or county government and no memorandum of understanding (MOU) established, applicants should contact the local fire authority early in the planning stages of a PV installation to determine if there are any unique requirements or approval processes within the specific jurisdiction.

In 2008, the California Office of the State Fire Marshal released a **final draft guideline** related to solar PV roof installations. This document was developed through collaboration with local fire departments and the solar industry with safety as the principal objective. The guideline's intent was to provide the solar industry with information to aid in designing, building and installing PV systems to meet this objective.

Portions of the 2008 State Fire Marshal guideline were adopted into the 2012 International Fire Code and are included in the 2013 California Building, Residential and Fire Codes. Permit applicants should contact the local fire authority to determine if specific fire safety requirements beyond current state regulations have been adopted in the local jurisdiction.

Planning and Zoning

As noted earlier in this guide, California cities and counties have authority to adopt laws that govern local land use, but are limited from restricting solar energy systems where energy is being generated for use on-site. Local governments have more latitude to determine where large, commercial energy generation can be located within their communities. For commercial solar energy projects, developers should determine what if any local plans, laws or regulations govern where the project can be located.

Site Inspection

After a solar energy system is installed, an inspector from the local enforcing agency physically inspects the installation. This field inspection is the last step before final project approval is granted by the local enforcing agency (note that a PV system cannot begin operating until it has received approval from both the local enforcing agency and the local utility). The field inspection ensures the solar energy system has been installed properly and according to the approved plans. Some local governments conduct "rough" or pre-inspections to ensure, for example, that roof penetrations are compliant with code or other requirements. Others may inspect the structural integrity of a building prior to installation.

Inspections focus on verifying that an installation is compliant with applicable building code, plumbing code, electrical code and fire safety requirements. To ensure building code compliance, an inspection will verify proper material selection, soundness of structural attachment to the roof or ground and that all components are securely fastened. Inspection of a solar PV installation's electrical system often focuses on wiring methods, circuit protection, grounding and safety signage. Inspection of a solar water heating system mostly focuses on preserving potable water quality, preventing leaks and preventing damage to the system. To ensure fire safety of a solar PV installation, the inspection verifies labeling of equipment to limit firefighter exposure to electrical voltage, space for firefighters to access the building or structure and limitations in roof installations due to firefighting suppression techniques.

Currently, inspection standards for solar energy systems can differ among jurisdictions due to differing interpretations of code standards and inconsistent expertise among field inspectors. Permit applicants should ask the local enforcing agency to provide a clear explanation of what the on-site inspection will entail, including what elements of the system the inspector will examine. This Guidebook provides a set of standard inspection criteria, which will eliminate much of this variation if adopted by jurisdictions.

Local enforcing agencies also schedule and execute site inspections differently. Many jurisdictions are ableto complete a site inspection within one or two days of notice that construction of the solar installation is
completed, while others may take longer. Similarly, some enforcing agencies are able to predict a narrow windowof time within which an inspector will visit a property, which saves the permit applicant's time and money,
while other agencies are less precise. Enforcing agencies should work to minimize the delay between the permit approval and site inspection and to minimize the inspection window. Finally, enforcing agencies should strive to eliminate "rough" or pre-inspections and, instead, ensure compliance with all applicable rules and requirements during the final inspection.

Local Utility Approval (Solar PV systems only)

All solar PV installations need the local utility's approval to link into the electricity grid, a process commonly referred to as "interconnection." This interconnection approval must be granted before a solar PV installation is allowed to operate and is completely separate from local government approval for the solar installation.
Interconnection approval ensures that a solar installation will safely connect and operate on the electricity grid.

Understanding the utility's requirements and process is very important. Permit applicants should contact the local electric utility at the beginning of the project planning stage. Utilities provide information about required interconnection agreements and can also provide information about available financial rebates or incentives. A permit applicant may also apply to the local utility for incentives available for new solar systems under the California Solar Initiative. To qualify for rebates or other incentives, property owners may be required to complete an energy audit before installing a PV system.

California's local utilities differ regarding when they require or allow filing an interconnection application during the local enforcing agency review process. Electric utilities may require or request that a contractor submit their application to the utility for review before a building permit is issued by the local city or county. Also, utilities may require one or more on-site inspections of the project before approving the interconnection agreement. This inspection process is completely different from an inspection performed by the local permitting agency.

The **Public Utilities Code** requires that all electric utilities respond within 30 working days after receiving a completed application for interconnection. To help ensure an application is considered complete when first submitted, permit applicants should contact their electric utility to learn the specific information and forms that must be included in the application.

Each utility provides information on its process for interconnection approval for solar PV installations on its website. The Resources section of this Guidebook provides web links to this information for the state's largest utilities.

QUICK TIPS FOR CONTRACTORS & PROPERTY OWNERS WHEN APPLYING FOR A PERMIT

Permit applicants can save time and money by following these tips.

- **Take time to review permit requirements of the local jurisdiction**
  Permitting rules and processes differ among different cities and counties. Understanding all local requirements will allow permit applicants to submit a complete and accurate permit application packet the first time.
- **Contact the local electric utility early in the permitting process (solar PV installations)**
  Local electric utilities have a completely separate approval process from the local jurisdiction's permitting process. Some electric utilities may require that the solar project be reviewed before the local jurisdiction issues a building permit. Pursuing utility approval early in the permit process enables the solar PV system to become operational as soon as possible.
- **Make sure that the solar installation that is built matches the submitted plans** The on-site inspector will verify that the installation aligns with proposed plans and any changes may require corrections and additional inspections.

QUICK TIPS FOR LOCAL PERMITTING AGENCIES

Local agencies can save valuable staff time and resources by following these tips.

- **Provide clear written instructions on the permittingprocess**
  Making this information available on the Internet and at the department's counter are low-cost ways to reduce errors by permit applicants.
- **Take advantage of information technology**
  Online or electronic application submittal and permit issuance, including use of e-signatures, can minimize or eliminate backlogs at the counter and, thus, free up staff time to focus on more complex permit applications.
- **Use standardized forms**
  Using standard forms that permit applicants easily fill out simplifies review for staff and reduces the possibility of omitted information.
- **Consider hosting contractor training events**
  Partnering with the solar contractor community to train contractors on proper permit submittals represents a small investment of time that may avoid hours of staff work processing flawed permitting applications.
- **Standardize requirements across jurisdictions**
  Using common permit materials, such as checklists and standard plans, across city and county lines reduces permit submittal errors among contractors working throughout a region.

Part 3

RECOMMENDATIONS FOR EXPEDITED PERMITTING FOR SMALL PV SYSTEMS

A streamlined, expedited permit process for small solar PV systems that simplifies and consolidates the structural, electrical and fire review of the PV system, can eliminate the need for detailed engineering studies and avoids unnecessary delays. Many local governments in California have already taken steps to streamline solar permitting realizing resource savings and increased throughput. These efforts have helped to inform the following recommendations.

A streamlined permit process for solar PV projects 10 kW or less includes, but is not limited to, the following elements.

- Use of a simple eligibility checklist to determine whether projects qualify for expedited permitting and requisite written materials.
- Use of a standard plan to describe the proposed solar PV project in the permit application. A standard plan reduces applicant errors and can simplify review.
- Permit application materials are made available through the Internet.
- Application submittals, fee payment, signatures and permit issuance are completed electronically, where capability exists.
- A streamlined process for structural review.
- For eligible projects, plan review and permit issuance are completed "over the counter" for walk-in applications or electronic submittals, or automatically through online software. If over-the-counter approval is not offered, a maximum timeframe of 1-3 days in which to review the permit application is provided.

A streamlined inspection process for solar PV systems should include the following.

- A single, final inspection coordinated among the various agencies or for inspections by multiple agencies to occur at the same time. Typically this involves coordination between the building department and the local fire authority.
- Use of a concise inspection list that provides permit applicants a clear understanding of what elements of the solar installation will be inspected before final approval of the installation.
- Enable inspection requests to be submitted online or electronically.
- Provide for on-site inspection during the next business day after notification that the solar system has been installed. If next business day is not possible, schedule inspection within five days.
- Provide a scheduling time window for on-site inspection of no more than two hours, and utilize phone and/or email communication to provide information on anticipated inspection time.
- The most streamlined permit process also ensures close coordination between the building department and the local utility to coordinate on-site inspections.

The model streamlined permit process recommended in this section is intended to apply to PV systems with a maximum power output of 10 kW or less that meet certain criteria. As PV systems increase in size and complexity, the ability to handle these projects via a standard framework diminishes. However, it should be noted that larger PV systems or installations with complicating factors can still be approved in a timely manner through a clear and efficient permit review process.

It is not the intent of an expedited process to circumvent the engineering process. Rather, the intent of a streamlined process is to recognize the similarities among these smaller systems and establish guidelines to determine when a PV project is within the boundaries of typical, well-engineered systems.

Efficient permitting requires cooperation among local permitting staff and solar contractors. Many local enforcing agencies have provided informational training for agency staff and solar contractors to explain local requirements and vice versa. This training has resulted in better educated staff and contractors, reducing permit application errors and saving time and resources for the local permitting agency.

PV Toolkit for Local Governments

The seven template documents provided in this section form an optional toolkit that local governments can utilize to reduce their costs of permit review, approval and inspection, and to ensure a predictable and efficient process for permit applicants.

Assembly Bill 2188 (2014, Muratsuchi) requires local governments to adopt an expedited permitting process that "substantially conforms" with the process outlined in this Guidebook. According to the bill's author:

> *"The term 'substantially conform' is intended to allow local governments enough flexibility to address potential changes that they believe are necessary while still meeting the goal of streamlining and standardizing solar permitting. Further, AB 2188 states that local governments may modify the Guidebook, if necessary, due to 'unique climatic, geological, seismological or topographical conditions.' These modifiers are intended to provide additional flexibility for local governments and are not intended to limit how the cities and counties 'substantially conform' to the Guidebook."*

The author further notes that this flexibility is also intended to allow jurisdictions to make any changes necessary to reflect the operational needs of local fire departments or districts.

The templates in this toolkit can be adopted in many jurisdictions with only minor administrative adjustments. However, building officials should review these documents and the assumptions on which they are based, and make further modifications as necessary to meet the needs of their jurisdiction. Jurisdictions are not required to notify the Building Standards Commission of modifications to these documents when adopted.

Templates for streamlining permitting of small systems (10 kW or less) on one-and two-family homes

- **Submittal Requirements Bulletin** — Outlines the necessary steps to secure permits and details what materials must be submitted in the permit application and key points of the on-site inspection.
- **Eligibility Checklist** — Defines the size, electrical, structural and fire safety requirements for solar installations to qualify for streamlined permitting.
- **Standard Electrical Plans** — Enable applicants to "fill in the blanks" to explain the electrical configuration of a solar PV system. This toolkit offers two simplified standard plans that can be used for small solar PV installations: one for systems using a central/string inverter and another for systems utilizing microinverters. Comprehensive standard plans for **central/string inverter** and for

microinverters are available online, provide instructions for the simplified standard plans and can be used for PV installations that do not fit into the simplified plans.

Materials to further improve permitting of solar PV systems of all sizes

- **Example MOU**— Provides a template agreement between two local agencies to coordinate permit review and approval. It can be used, for example, to streamline review between a local building department and a local fire service.
- **Structural Criteria** — Ensures structural code compliance for flush-mounted solar arrays. It enables applicants to submit a simple list and supporting documents after conducting a site audit to determine structural conditions. A **technical appendix** describing the technical analysis behind these criteria is listed in the Additional Resources section.
- **Technical Information Bulletin for Solar PV Systems (on all types of buildings)** — Provides consistent and comprehensive information regarding current state requirements for solar
  PV systems on all buildings, including both residential and commercial buildings, in a local jurisdiction. It could be issued as a department advisory or as an informational handout and can be used by solar installers as a reference document. Enforcing agencies can modify the information bulletin based on local needs or policies.
- **Inspection Guide** — Provides a code reference and field inspection sheet for solar PV systems inspections. This guide is meant to improve consistency and uniformity in inspections and to provide permit applicants with a clear understanding of the process.

PV Toolkit for Local Governments

Template permitting documents that local governments can edit are available at
energycenter.org/permittingtoolkit

This information bulletin is published to guide applicants through a streamlined permitting process for solar photovoltaic (PV) projects 10 kW in size or smaller. This bulletin provides information about submittal requirements for plan review, required fees and inspections.

*Note: Language in **ALL CAPS** below indicates where local jurisdictions need to provide information specific to the jurisdiction. Language in italics indicates explanatory notes from the authors of this Guidebook.*

1. Approval Requirements

The following permits are required to install a solar PV system with a maximum power output of 10 kW or less:

a) [LIST TYPE OF PERMIT(S) REQUIRED BY THE LOCAL JURISDICTION, i.e., ELECTRICAL OR BUILDING PERMIT].

Planning review [IS/IS NOT] required for solar PV installations of this size.
Fire Department approval [IS/IS NOT] required for solar PV installations of this size.

2. Submittal Requirements

a) Completed permit application form. This permit application form can be downloaded at [WEBSITE ADDRESS].

b) Demonstrate compliance with the eligibility checklist for expedited permitting. These criteria can be downloaded at [WEBSITE ADDRESS].

This Guidebook recommends use of a simple checklist to clearly identify eligibility criteria for expedited permitting, where established.

c) A completed Standard Electrical Plan. The standard plan may be used for proposed solar installations 10 kW in size or smaller and can be downloaded at [WEBSITE ADDRESS].

This Guidebook recommends use of a standard plan that allows permit applicants to simply fill in information regarding a solar system's electrical configuration. Template standard plans are provided in this Guidebook (PV Toolkit Documents 3 and4).

If standard electrical plans are not provided for use, an electrical plan should be submitted that includes the following.

- *Locations of main service or utility disconnect*
- *Total number of modules, number of modules per string and the total number of strings*
- *Make and model of inverter(s) and/or combiner box if used*
- *One-line diagram of system*
- *Specify grounding/bonding, conductor type and size, conduit type and size and number of conductors in each section of conduit*
- *If batteries are to be installed, include them in the diagram and show their locations and venting*

- *Equipment cut sheets including inverters, modules, AC and DC disconnects, combiners and wind generators*
- *Labeling of equipment as required by CEC, Sections 690 and 705*
- *Site diagram showing the arrangement of panels on the roof or ground, north arrow, lot dimensions and the distance from property lines to adjacent buildings/structures (existing and proposed)*

d) A roof plan showing roof layout, PV panels and the following fire safety items: approximate location of roof access point, location of code-compliant access pathways, PV system fire classification
and the locations of all required labels and markings. Examples of clear path access pathways are available in the State Fire Marshal Solar PV Installation Guide. **http://osfm.fire.ca.gov/pdf/reports/solarphotovoltaicguideline.pdf**.

e) Completed expedited Structural Criteria along with required documentation. Structural Criteria can be downloaded at [WEBSITE ADDRESS].

For non-qualifying systems, provide structural drawings and calculations stamped and signed by a California-licensed civil or structural engineer, along with the following information.

- The type of roof covering and the number of roof coverings installed
- Type of roof framing, size of members and spacing
- Weight of panels, support locations and method of attachment
- Framing plan and details for any work necessary to strengthen the existing roof structure
- Site-specific structural calculations
- Where an approved racking system is used, provide documentation showing manufacturer of the rack system, maximum allowable weight the system can support, attachment method to the roof or ground and product evaluation information or structural design for the rack system

This Guidebook recommends that local jurisdictions adopt a prescriptive approach to establishing minimal structural requirements that avoids the need for structural calculations. A simple list of criteria is provided in this Guidebook (PV Toolkit Document 5). A full explanation of the methods and calculations used to produce these criteria can be found in the Structural Technical Appendix for Residential Rooftop Solar Installations, which is available at **http://www.opr.ca.gov/docs/Solar_Structural_Technical_Appendix.pdf**.

3. Plan Review

Permit applications can be submitted to [DEPARTMENT NAME] in person at [ADDRESS] and [IF APPLICABLE] electronically through: [WEBSITE/EMAIL/FAX].

Permit applications utilizing standard plan may be approved "over the counter" at [ADDRESS]. Permit applications may also be submitted electronically for "over the counter" approval [IF APPLICABLE] through: [WEBSITE/EMAIL/FAX].

Permits not approved "over the counter" should be reviewed in [ONE TO THREE] days.

4. Fees

[PROVIDE CLEAR FEE SCHEDULE]

5. Inspections

Once all permits to construct the solar installation have been issued and the system has been installed, it must be inspected before final approval is granted for the solar system. On-site inspections can be scheduled by contacting [DEPARTMENT] by telephone at [PHONE NUMBER] or electronically at [WEBSITE OR EMAIL ADDRESS]. Inspection requests received within business hours are typically scheduled for the next business day. If next business day is not available, inspection should happen within a five-day window.

Permit holders must be prepared to show conformance with all technical requirements in the field at the time of inspection. The inspector will verify that the installation is in conformance with applicable code requirements and with the approved plans.

The inspection checklist provides an overview of common points of inspection that the applicant should be prepared to show compliance. If not available, common checks include the following.

- Number of PV modules and model number match plans and specification sheets number match plans and specification sheets.
- Array conductors and components are installed in a neat and workman-like manner.
- PV array is properly grounded.
- Electrical boxes are accessible and connections are suitable for environment.
- Array is fastened and sealed according to attachment detail.
- Conductor's ratings and sizes match plans.
- Appropriate signs are property constructed, installed and displayed, including the following.
  - Sign identifying PV power source system attributes at DC disconnect
  - Sign identifying AC point of connection
  - Sign identifying switch for alternative power system
- Equipment ratings are consistent with application and installed signs on the installation, including the following.
  - Inverter has a rating as high as max voltage on PV power source sign.
  - DC-side overcurrent circuit protection devices (OCPDs) are DC rated at least as high as max voltage on sign.
  - Switches and OCPDs are installed according to the manufacturer's specifications (i.e., many 600VDC switches require passing through the switch poles twice in a specific way).
  - Inverter is rated for the site AC voltage supplied and shown on the AC point of connection sign.
  - OCPD connected to the AC output of the inverter is rated at least 125% of maximum current on sign and is no larger than the maximum OCPD on the inverter listing label.
  - Sum of the main OCPD and the inverter OCPD is rated for not more than 120% of the bus bar rating.

6. Departmental Contact Information

For additional information regarding this permit process, please consult our departmental website at [WEBSITE] or contact [DIVISION NAME] at [PHONE NUMBER].

PV TOOLKIT DOCUMENT #2

Your City logo here

Eligibility Checklist for Expedited Solar Photovoltaic Permitting for One- and Two-Family Dwellings

GENERAL REQUIREMENTS

A. System size is 10 kW AC CEC rating or less	☐ Y	☐ N
B. The solar array is roof-mounted on one- or two-family dwelling or accessory structure	☐ Y	☐ N
C. The solar panel/module arrays will not exceed the maximum legal building height	☐ Y	☐ N
D. Solar system is utility interactive and without battery storage	☐ Y	☐ N
E. Permit application is completed and attached	☐ Y	☐ N

ELECTRICAL REQUIREMENTS

A. No more than four photovoltaic module strings are connected to each Maximum Power Point Tracking (MPPT) input where source circuit fusing is included in the inverter	☐ Y	☐ N
1) No more than two strings per MPPT input where source circuit fusing is not included	☐ Y	☐ N
2) Fuses (if needed) are rated to the series fuse rating of the PV module	☐ Y	☐ N
3) No more than one noninverter-integrated DC combiner is utilized per inverter	☐ Y	☐ N
B. For central inverter systems: No more than two inverters are utilized	☐ Y	☐ N
C. The PV system is interconnected to a single-phase AC service panel of nominal 120/220 Vac with a bus bar rating of 225 A or less	☐ Y	☐ N
D. The PV system is connected to the load side of the utility distribution equipment	☐ Y	☐ N
E. A Solar PV Standard Plan and supporting documentation is completed and attached	☐ Y	☐ N

STRUCTURAL REQUIREMENTS

A. A completed Structural Criteria and supporting documentation is attached (if required)	☐ Y	☐ N

FIRE SAFETY REQUIREMENTS

A. Clear access pathways provided	☐ Y	☐ N
B. Fire classification solar system is provided	☐ Y	☐ N
C. All required markings and labels are provided	☐ Y	☐ N
D. A diagram of the roof layout of all panels, modules, clear access pathways and approximate locations of electrical disconnecting means and roof access points is completed and attached	☐ Y	☐ N

Notes:

1. *These criteria are intended for expedited solar permitting process.*
2. *If any items are checked NO, revise design to fit within Eligibility Checklist, otherwise permit application may go through standard process.*

PV TOOLKIT DOCUMENT #3

Your City logo here

Solar PV Standard Plan — Simplified Central/String Inverter Systems for One- and Two-Family Dwellings

SCOPE: Use this plan ONLY for electrical review of utility central/string inverter systems not exceeding a system AC inverter output rating of 10kW on the roof of a one- or two-family dwelling or accessory building. The specific structural and fire requirements are covered in other parts of the California Solar Permitting Guidebook. The photovoltaic system must interconnect to the load side of a single-phase AC service panel of nominal 120/240Vac with a bus bar rating of 225A or less. This plan is not intended for bipolar systems, hybrid systems or systems that utilize storage batteries, charge controllers, trackers, more than two inverters or more than one DC combiner (noninverter-integrated) per inverter. Systems must be in compliance with current California Building Standards Codes and local amendments of the authority having jurisdiction (AHJ). Other Articles of the California Electrical Code (CEC) shall apply as specified in 690.3. For systems beyond this scope or the criteria in this plan, consult the AHJ for details regarding comprehensive process.

MANUFACTURER'S SPECIFICATION SHEETS MUST BE PROVIDED for proposed inverters, modules, combiner/junction boxes, racking systems, and rapid shutdown system or equipment. Installation instructions for bonding and grounding equipment and rapid shutdown systems shall be provided, and local AHJs may require additional details. Listed and labeled equipment shall be installed and used in accordance with any instructions included in the listing or labeling (CEC 110.3). Equipment intended for use with PV system shall be listed for the PV application (CEC 690.4[B]).

Job Address:_____Permit #: _____

Contractor/Engineer Name:_____License # and Class: _____

Signature:_____Date:_____Phone Number: _____

Total # of Inverters installed:_____(If more than one inverter, complete and attach the "Supplemental Calculation Sheets" and the "Load Center Calculations" if a new load center is to be used.)

Inverter 1 AC Output Power Rating: _____ Watts

Inverter 2 AC Output Power Rating (ifapplicable):_____Watts

Combined Inverter Output Power Rating: _____≤ 10,000 Watts

Ambient Temperature Adjustment Factors: select the box for the expected lowest ambient temperature (T_L) with the corresponding Ambient Temperature Correction Factor (C_F):

1) ☐ If T_L is greater than or equal to -5°C **,C_F = 1.12**

☐ If T_L is between -6°C and -10°C **,C_F = 1.14**

Average ambient high temperature (T_H) ≤ 47° C

Note: For a lower T_L or a higher T_H, this plan is not applicable.

DC Information:

Module Manufacturer:_____ _____ Model: _____
2) Module V_{oc} (from module nameplate):_____Volts
3) Module I_{sc} (from module nameplate):_____Amps Is Module I_{SC} below 9.6 Amps? ☐ Yes ☐ No (If No, this plan is not applicable.)
4) Module DC output power under standard test conditions (STC) =_____Watts (STC)

5) DC Module Layout

Identify each source circuit (string) for inverter 1 shown on the roof plan with a Tag (e.g. A,B,C,…)	Number of modules per source circuit for inverter 1	Identify, by tag, which source circuits on the roof are to be paralleled (if none, put N/A)
		Combiner 1:
		Combiner 2:
Total number of source circuits for inverter 1:		

6) Are DC/DC Converters used? ☐ Yes ☐ No If No, skip to Step 7. If Yes enter info below.

DC/DC Converter Model #:_____Max DC Output Current:_____Amps Max # of DC/DC Converters in an Input Circuit: _____

DC/DC Converter Max DC Input Voltage:_____Volts
Max DC Output Current:_____Volts
DC/DC Converter Max DC Input Power:_____Watts

7) Maximum System DC Voltage — Use for systems without DC/DC converters.

☐

☐ A. Module V_{OC} (STEP 2) _____x # of modules in series (STEP 5) _____x C_F (STEP 1) _____ = _____V

Table 1. Maximum Number of PV Modules in Series Based on Module Rated V_{OC} for 600 Vdc Rated Equipment (CEC 690.7)													
Max. Rated Module V_{OC} if C_F = 1.12 (Volts)	29.76	31.51	33.48	35.71	38.27	41.21	44.64	48.70	53.57	59.52	66.96	76.53	89.29
Max. Rated Module V_{OC} if C_F = 1.14 (Volts)	29.24	30.96	32.89	35.09	37.59	40.49	43.86	47.85	52.63	58.48	65.79	75.19	87.72
Max # of Modules for 600 Vdc	18	17	16	15	14	13	12	11	10	9	8	7	6

Use for systems with DC/DC converters. The value calculated below must be less than DC/DC converter max DC input voltage (STEP 6)

☐

☐ B. Module V_{OC} (STEP 2) _____x # of modules per converter (STEP 6) _____x C_F (STEP 1) _____ = _____V

Table 2. Largest Module V_{OC} for Single-Module DC/DC Converter Configurations (with 80 V AFCI Cap) (CEC 690.7 and 690.11)																
Max. Rated Module V_{OC} if C_F = 1.12 (Volts)	30.4	33.0	35.7	38.4	41.1	43.8	46.4	49.1	51.8	54.5	57.1	59.8	62.5	65.2	67.9	70.5
Max. Rated Module V_{OC} if C_F = 1.14 (Volts)	29.8	32.5	35.1	37.7	40.4	43.0	45.6	48.2	50.9	53.5	56.1	58.8	61.4	64.0	66.7	69.3
DC/DC Converter Max DC Input (Step #6) (Volts)	34	37	40	43	46	49	52	55	58	61	64	67	70	73	76	79

8) Maximum System DC Voltage from DC/DC Converters to Inverter — Only required if Yes in Step 6

Maximum System DC Voltage =_____Volts

9) Sizing Source Circuit Conductors

Source Conductor Size = Min #10 AWG cooper conductor, 90°C wet (USE-2, PV Wire, XHHW-2, THWN-2, RHW-2)
For up to 8 conductors in roof-mounted conduit exposed to sunlight at least ½" from the roof covering. (CEC 310)

Note: For over 8 conductors in the conduit or mounting height of lower than ½" from the roof, this plan is not applicable.

10) Are PV source circuits combined prior to the inverter? ☐ Yes ☐ No
If No, use Single Line Diagram 1 and proceed to Step 12.
If Yes, use Single Line Diagram 2 and proceed to step 11 after this step.

Is source circuit OCPD required? ☐ Yes ☐ No
Source circuit OCPD size (if needed): 15 Amps

Are the source circuits combined on the roof? ☐ Yes ☐ No
If "Yes", the DC output of the combiner shall have a load break disconnecting means located in the combiner or within 1.8m (6ft) of the combiner (CEC 690.15(c)).

11) Sizing PV Output Circuit Conductors
Sizing strings are combined (answered "Yes" in Step 10).
Output Circuit Conductor Size = Min. #6 AWG copper conductor

12) Inverter DC Disconnect
Does the inverter have an integrated DC disconnect? ☐ Yes ☐ No If Yes, proceed to Step 13.
If No, the external DC disconnect to be installed is rated for ____Amps (DC) and ____ Volts (DC)

13) Inverter Information
Manufacturer: _____ Model: _____
Max. Continuous AC Output Current Rating: ____Amps
Integrated DC Arc-Fault Circuit Protection? ☐ Yes ☐ No (If No is selected, this plan is not applicable.)
Grounded or Underground System? ☐ Grounded ☐ Ungrounded

AC Information:

14) Sizing Inverter Output Circuit Conductors and OCPD
Inverter Output OCPD rating = _____Amps (Table 3)
Inverter Output Circuit Conductor Size = _____AWG (Table 3)

Table 3. Minimum Inverter Output OCPD and Circuit Conductor Size

Inverter Continuous Output Current Rating (Amps) (Step 14)	12	16	20	24	28	32	36	40	48
Minimum OCPD Size (Amps)	15	20	25	30	35	40	45	50	60
Minimum Conductor Size (AWG, 75°C, Copper)	14	12	10	10	8	8	6	6	6

15) Point of Connection to Utility

Note: Only load side connections are permitted with this plan.

Is the PV OCPD positioned at the opposite end from input feeder location or main OCPD location?

- ☐ Yes, use Table 4, row 3 and circle the Max Combined PV System OCPD(s) at 120% based on the busbar rating and main OCPD values.
- ☐ No, use Table 4, row 4 and circle the Max Combined PV System OCPD(s) at 100% based on the busbar rating and main OCPD values.

Per 705.12(D)(2)(3): The value circled in Table 4 should be equal to or greater than the OCPD value selected from Table 3 (for a single inverter) or the OCPD value from Step S18 (for two inverters).

Table 4. Maximum Combined Supply OCPDs Based on Busbar Rating (Amps) per CEC 705.12(D)(2)(3)(b)									
Busbar Rating	100	125	125	200	200	200	225	225	225
Main OCPD	100	100	125	150	175	200	175	200	225
Max Combined PV System OCPD(s) at 120% of Busbar Rating	20	50	25	60*	60*	40	60*	60*	45
Max Combined PV System OCPD(s) at 100% Busbar Rating	0	25	0	50	25	0	50	25	0

*This value has been lowered to 60 A from the calculated value to reflect 10 kW AC size maximum.

Reduction of the Main Break is not permitted with this plan[1].

Inteconnection to center-fed panel boards may be permitted per Informational Bulletin.

[1] See Page 8, Part 1 of California Solar Permitting Guidebook for guidance.

16) Rapid Shutdown[2]

The rapid shutdown initiation device shall be labeled according to CEC 690.56(C), and its location shall be shown on the site plan drawing. The rapid shutdown initiation device may be the inverter output or input circuits' disconnecting means, the service main disconnect, or a separate device as approved by the AHJ. The disconnecting means shall be identified for the purpose, suitable for their environment, and listed as a disconnecting means. A single rapid shutdown initiation device shall operate all disconnecting means necessary to control conductors in compliance with CEC 690.12. Note: Check with the AHJ regarding approval where field verification of reduction of voltage within the time required by CEC 690.12 is performed.

Rapid shutdown shall be provided as required by CEC 690.12 with one of the following methods (Select one):

- ☐ The inverter(s) is within 10 feet of the array, and the location of the inverter is such that uncontrolled PV system conductors are no greater than 5 feet of length within the building. A remotely-controlled AC disconnecting means is required immediately adjacent to or as close as practicable to the inverters, and located within 10 feet of the array.

- ☐ The inverter(s) is within 10 feet of the array, and the location of the inverter is such that uncontrolled PV system conductors are no greater than 5 feet of length within the building. Reduction of the voltage for the inverter output within the time required by CEC 690.12 shall be verified in the field, or the inverter output is listed to UL 1741 with rapid shutdown capability.

- ☐ Remotely-controlled DC disconnecting means are located within 10 feet of the PV array and DC input of the inverter(s), and the locations of the disconnecting means are such that uncontrolled PV system conductors are no greater than 5 feet of length within the building. Reduction of the voltage for the inverter output within the time required by CEC 690.12 shall be verified in the field, or the inverter output is listed to UL 1741 with rapid shutdown capability.

- ☐ Remotely-controlled DC disconnecting means is located within 10 feet of the array at the DC input of inverter(s) connected to a module level DC-DC converter circuit where the DC-DC converter circuit meets the requirements for controlled conductors when disconnected from the inverter. Reduction of the voltage for the DC-DC converter output and the inverter output within the time required by CEC 690.12 shall be verified in the field, or the DC-DC converter output and the inverter output are listed to UL 1741 with rapid shutdown capability.

- ☐ A UL 1741-listed and identified inverter(s) with input and output rapid shutdown capability supplying module level DC-DC converter circuit where the DC-DC converter circuit meets the requirements for controlled conductors when disconnected from the inverter.

- ☐ A UL 1741-listed rapid shutdown system:
  Manufacturer: _____
  Testing Agency Name: _____
  System Model Number: _____
  System Components: _____

[2] See Page 8, Part 1 of the California Solar Permitting Guidebook for guidance.

17) Grounding and Bonding of Modules and Racking System (select one): ☐ Racking system listed to UL 2703 using modules identified in the listing. ☐ Other method subject to AHJ approval

Solar PV Standard Plan — Simplified
Central/String Inverter Systems for One- and Two-Family Dwellings

Markings

CEC Articles 690 and 705 and CA Residential Code Section R324 require the following labels or markings be installed at these components of the photovoltaic system:

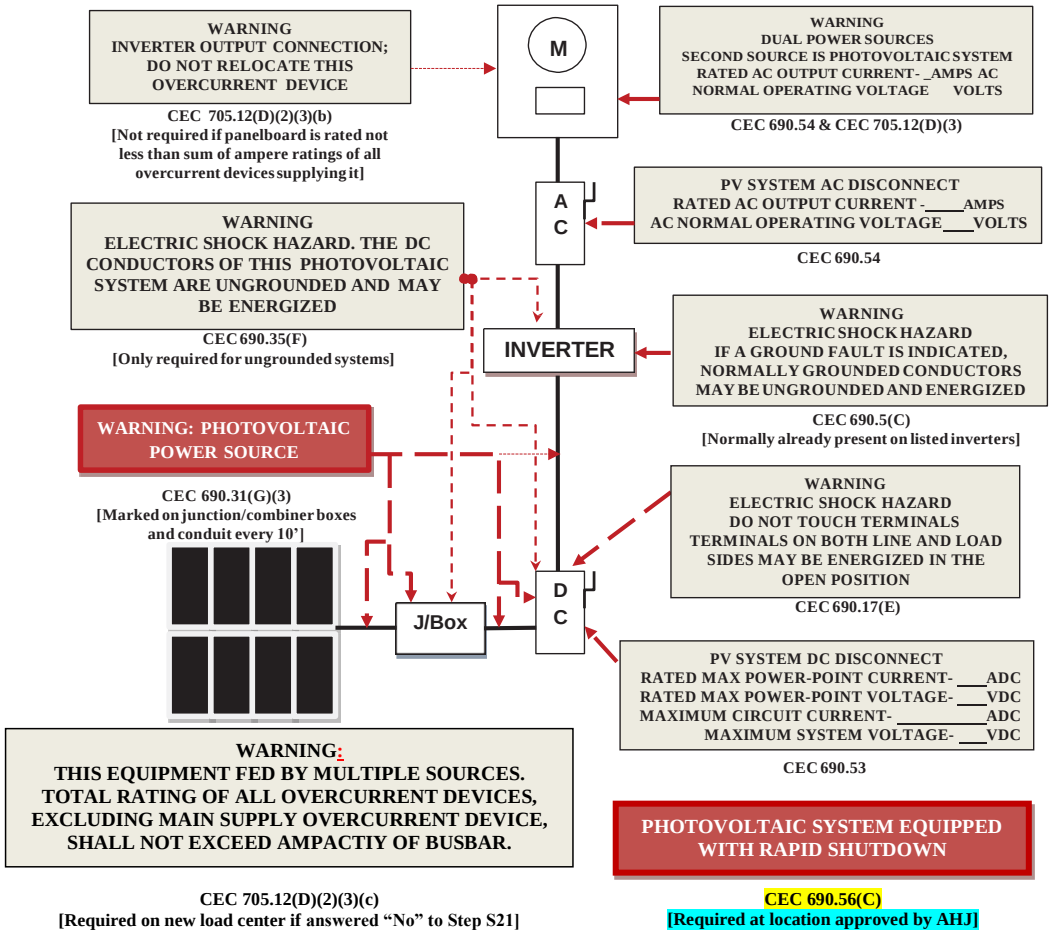

Informational note: ANSI Z535.4 provides guidelines for the design of safety signs and labels for application to products. A phenolic plaque with contrasting colors between the text and background would meet the intent of the code for permanency. No type size is specified, but 20 point (3/8") should be considered the minimum.

CEC 705.12 requires a permanent plaque or directory denoting all electric power sources on or in the premises or rapid fire shutdown equipment.

Solar PV Standard Plan — Simplified
Central/String Inverter Systems for One- and Two-Family Dwellings

TAG	DESCRIPTION
1	SOLAR PV MODULE / STRING
2	DC/DC CONVERTERS INSTALLED? YES / NO (IF YES, STEPS 6 & 8 REQUIRED)
3	SOURCE CIRCUIT JUNCTION BOX INSTALLED?: YES / NO
4	SEPARATE DC DISCONNECT INSTALLED?: YES / NO
5	INTERNAL INVERTER DC DISCONNECT: YES / NO
6	CENTRAL INVERTER
7	LOAD CENTER INSTALLED?: YES / NO
8	PV PRODUCTION METER INSTALLED?: YES / NO
9	*SEPARATE AC DISCONNECT INSTALLED?: YES / NO
10	CONNECT TO INVERTER #2 (USE LINE DIAGRAM 2)

* Consult with your local AHJ and /or Utility

SINGLE-LINE DIAGRAM #1 – NO STRINGS COMBINED PRIOR TO INVERTER

CHECK A BOX FOR WHETHER SYSTEM IS GROUNDED OR UNGROUNDED: ☐ GROUNDED (INCLUDE GEC)

REFER TO STEP 16 FOR RAPID SHUTDOWN DETAILS ☐ UNGROUNDED

FOR UNGROUNDED SYSTEMS:
- DC OCPD MUST DISCONNECT BOTH CONDUCTORS OF EACH SOURCE CIRCUIT
- UNGROUNDED CONDUCTORS MUST BE IDENTIFIED PER 210.5(C). WHITE-FINISHED CONDUCTORS ARE NOT PERMITTED.

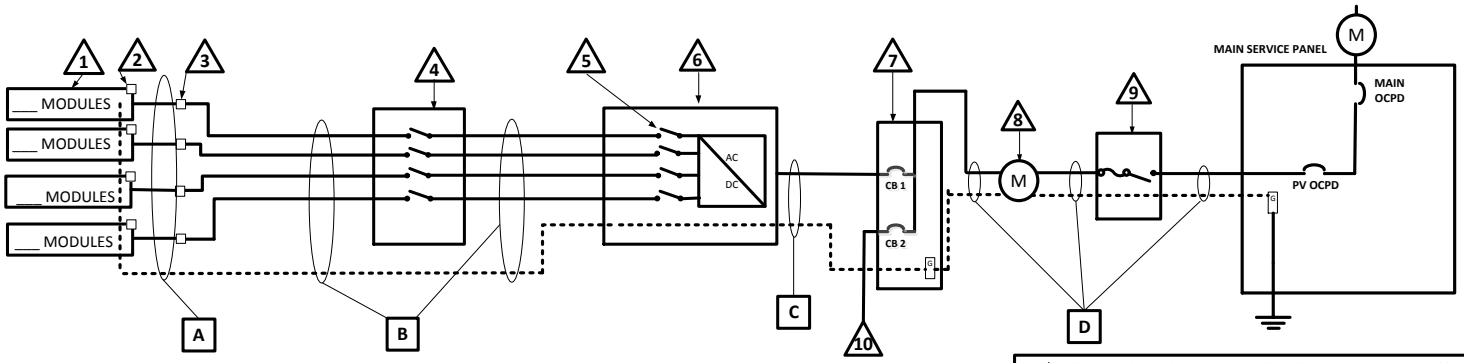

IF DC/DC CONVERTERS ARE USED, CHECK THE BOX BELOW THE CORRESPONDING CONFIGURATION

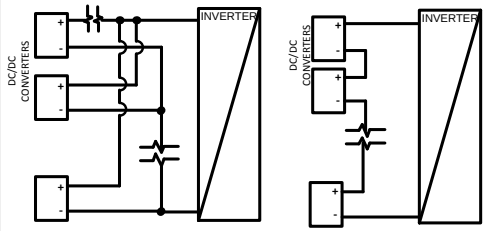

☐ PARALLEL DC/DC CONVERTERS ON ONE SOURCE CIRCUIT (FIXED UNIT VOLTAGE DC/DC CONVERTERS)

☐ DC/DC CONVERTERS ARE ALL RUN IN SERIES (FIXED SOURCE CIRCUIT VOLTAGE DC/DC CONVERTERS)

CONDUCTOR/CONDUIT SCHEDULE

☐ TAG	DESCRIPTION AND CONDUCTOR TYPE	CONDUCTOR SIZE	NUMBER OF CONDUCTORS	CONDUIT/CABLE TYPE	CONDUIT SIZE
A	USE-2 ☐ OR PV-WIRE ☐				
	EGC/GEC:				
B					
	EGC/GEC:				
C					
	EGC/GEC:				
D					
	EGC/GEC:				

ENTER "N/A" WHERE SUITABLE FOR WHEN NOT USING CONDUIT OR CABLE AS PERMITTED BY CODE

Field Code Changed

Solar PV Standard Plan — Simplified
Central/String Inverter Systems for One- and Two-Family Dwellings

TAG	DESCRIPTION
1	SOLAR PV MODULE / STRING
2	DC/DC CONVERTERS INSTALLED? YES / NO (IF YES, STEPS 6 & 8 REQUIRED)
3	SOURCE CIRCUIT JUNCTION BOX INSTALLED?: YES / NO
4	COMBINER BOX (STEPS 11 & 12 REQUIRED)
5	SEPARATE DC DISCONNECT INSTALLED?: YES / NO
6	INTERNAL INVERTER DC DISCONNECT: YES / NO
7	CENTRAL INVERTER
8	LOAD CENTER INSTALLED?: YES / NO
9	PV PRODUCTION METER INSTALLED?: YES / NO
10	*SEPARATE AC DISCONNECT INSTALLED?: YES / NO
11	CONNECT TO INVERTER #2 (USE LINE DIAGRAM 4)

* Consult with your local AHJ and /or Utility

SINGLE-LINE DIAGRAM #2 – COMBINING STRINGS PRIOR TO INVERTER

CHECK A BOX FOR WHETHER SYSTEM IS GROUNDED OR UNGROUNDED: ☐ GROUNDED (INCLUDE GEC)

REFER TO STEP 16 FOR RAPID SHUTDOWN DETAILS ☐ UNGROUNDED

FOR UNGROUNDED SYSTEMS:
- DC OCPD MUST DISCONNECT BOTH CONDUCTORS OF EACH SOURCE CIRCUIT
- UNGROUNDED CONDUCTORS MUST BE IDENTIFIED PER 210.5(C). WHITE-FINISHED CONDUCTORS ARE NOT PERMITTED.

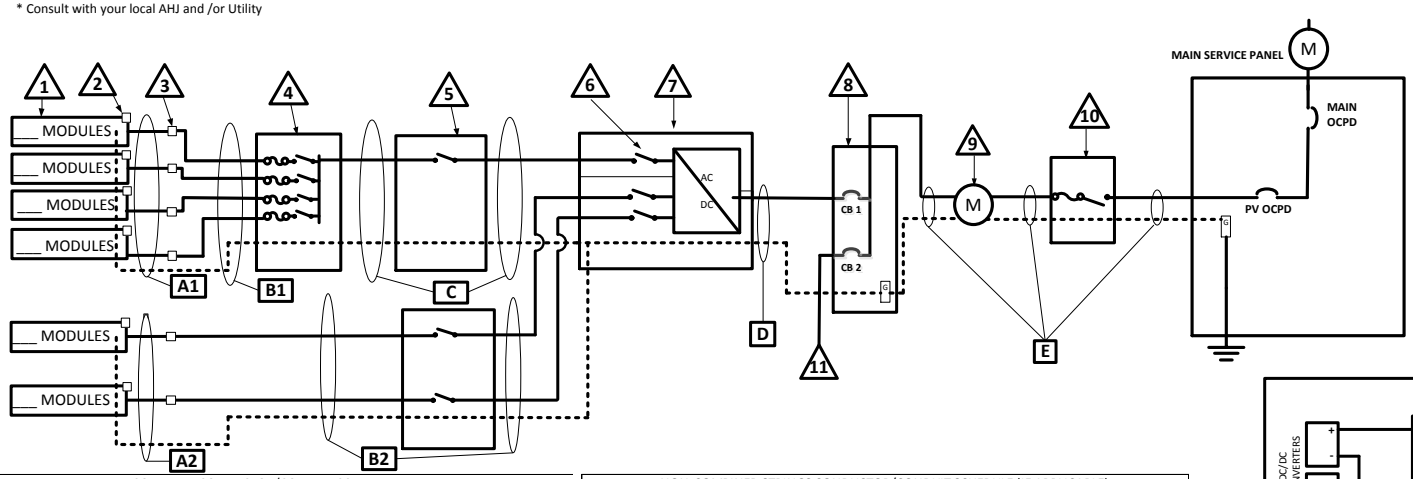

COMBINER CONDUCTOR/CONDUIT SCHEDULE

☐ TAG	DESCRIPTION AND CONDUCTOR TYPE	CONDUCTOR SIZE	NUMBER OF CONDUCTORS	CONDUIT/CABLE TYPE	CONDUIT SIZE
A1	USE-2 ☐ OR PV-WIRE ☐				
	EGC/GEC:				
B1					
	EGC/GEC:				
C					
	EGC/GEC:				
D					
	EGC/GEC:				
E					
	EGC/GEC:				

NON-COMBINED STRINGS CONDUCTOR/CONDUIT SCHEDULE (IF APPLICABLE)

☐ TAG	DESCRIPTION AND CONDUCTOR TYPE	CONDUCTOR SIZE	NUMBER OF CONDUCTORS	CONDUIT/CABLE TYPE	CONDUIT SIZE
A2	USE-2 ☐ OR PV-WIRE ☐				
	EGC/GEC:				
B2					
	EGC/GEC:				

ENTER "N/A" WHERE SUITABLE FOR WHEN NOT USING CONDUIT OR CABLE AS PERMITTED BY CODE

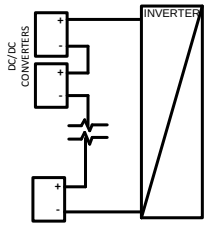

IF DC/DC CONVERTERS ARE USED, THEY ARE RUN IN SERIES (FIXED SOURCE CIRCUIT VOLTAGE DC/DC CONVERTERS)

Field Code Changed

Solar PV Standard Plan — Simplified
Central/String Inverter Systems for One- and Two-Family Dwellings

Supplemental Calculation Sheets for Inverter #2 (Only include if second inverter is used)

DC Information:

Module Manufacturer:_____ Model: _____

S2) Module V_{OC} (from module nameplate):____Volts

S3) Module I_{SC} (from module nameplate): ____ Amps

Is Module I_{SC} below 9.6 Amps? ☐ Yes ☐ No (If No, this plan is not applicable.)

S4) Module DC output power under standard test conditions (STC) =_____Watts (STC)

S5) DC Module Layout

Identify each source circuit (string) for inverter 1 shown on the roof plan with a Tag (e.g. A,B,C,…)	Number of modules per source circuit for inverter 1	Identify, by tag, which source circuits on the roof are to be paralleled (if none, put N/A)
		Combiner 1:
		Combiner 2:
Total number of source circuits for inverter 1:		

S6) Are DC/DC Converters used? ☐ Yes ☐ No If No, skip to Step S7. If Yes, enter info below.

DC/DC Converter Model #:_____Max DC Output Current:_____Amps Max # of DC/DC Converters in an Input Circuit: _____

DC/DC Converter Max DC Input Voltage:_____Volts
Max DC Output Current:_____Volts
DC/DC Converter Max DC Input Power:_____Watts

S7) Maximum System DC Voltage

Use Systems without DC/DC converters.

A. Module V_{OC} (STEP S2) = _____x # of modules in series (STEP S5) _____x C_F (STEP 1) _____ = _ _____V

Table S1. Maximum Number of PV Modules in Series Based on Module Rated V_{OC} for 600Vdc Rated Equipment (CEC 690.7)													
Max. Rated Module V_{OC} (*1.12) (Volts)	29.76	31.51	33.48	35.71	38.27	41.21	44.64	48.70	53.57	59.52	66.96	76.53	89.29
Max. Rated Module V_{OC} (*1.14) (Volts)	29.24	30.96	32.89	35.09	37.59	40.49	43.86	47.85	52.63	58.48	65.79	75.19	87.72
Max # of Modules for 600 Vdc	18	17	16	15	14	13	12	11	10	9	8	7	6

Use for systems with DC/DC converters. The value calculated below must be less than DC/DC converter max DC input voltage (STEP 6)

B. Module V_{OC} (STEP S2) = _____x # of modules per converter (STEP S6) _____x C_F (STEP 1) _____ = _ _____V

Table S2. Largest Module V_{OC} for Single-Module DC/DC Converter Configurations (With 80V AFCI Cap) (CEC 690.7 and 690.11)

S8) Maximum System DC Voltage from DC/DC Converters to Inverter — Only required if Yes in Step S6
Maximum System DC Voltage = ____ Volts

S9) Sizing Source Circuit Conductors
Source Circuit Conductor Size = Min. #10 AWG copper conductor, 90° C wet (USE-2, PV Wire, XHHW-2, THWN-2, RHW-2)
For up to 8 conductors in roof-mounted conduit exposed to sunlight at least ½" from the roof covering. (CEC 310)

Note: For over 8 conductors in the conduit or mounting height of lower than ½" from the roof, this plan is not applicable.

S10) Are PV source circuits combined prior to the inverter? ☐ Yes ☐ No
If No, use Single Line Diagram 1 with Single Line Diagram 3 and proceed to Step S12.
If Yes, use Single Line Diagram 2 with Single Line Diagram 4 and proceed to Step S11 after this step.
Is source circuit OCPD required? ☐ Yes ☐ No
Source circuit OCPD size (if needed): 15 Amps
Are the source circuits combined on the roof? ☐ Yes ☐ No
If "Yes," the DC output of the combiner shall have a load breaker disconnecting means located in the combiner or within 1.8m (6ft) of the combiner.

S11) Sizing PV Output Circuit Conductors — If strings are combined (answered "Yes" in Step S10), Output Circuit Conductor Size = Min. #6 AWG copper conductor.

S12) Inverter Disconnect
Does the inverter have an integrated DC disconnect? ☐ Yes ☐ No If Yes, proceed to Step S13.
If no, the external DC disconnect to be installed is rated for ____Amps (DC) and ____Volts (DC)

S13) Inverter Information
Manufacturer: _____ Model: _____
Max Continuous AC Output Rating: ____Amps

Integrated DC Arc-Fault Circuit Protection? ☐ Yes ☐ No (If No is selected, this plan is not applicable.)
Grounded or Ungrounded System? ☐ Grounded ☐ Ungrounded

AC Information:

S14) Sizing Inverter Output Circuit Conductors and OCPD

Inverter Output OCPD rating = _____Amps (Table 3)

Inverter Output Circuit Conductor Size = _____AWG (Table 3)

Table 3. Minimum Inverter Output OCPD and Circuit Conductor Size									
Inverter Continuous Output Current Rating (Amps) (Step 14)	12	16	20	24	28	32	36	40	48
Minimum OCPD Size (Amps)	15	20	25	30	35	40	45	50	60
Minimum Conductor Size (AWG, 75°C, Copper)	14	12	10	10	8	8	6	6	6

Load Center Calculations
(Omit if a load center will not be installed for PV OCPDs)

S18) Load Center Output:

Calculate the sum of the maximum AC outputs from each inverter.

Inverter #1 Max Continuous AC Output Current Rating [STEP S13] _____ × 1.25 = _____ Amps
Inverter #2 Max Continuous AC Output Current Rating [STEP S13] _____ × 1.25 = _____ Amps
Total inverter currents connected to load center (sum of above) = _____ Amps

Conductor Size: _____AWG
Overcurrent Protection Device: _____Amps
Load center busbar rating: _____Amps
Can the load center accept more than two breakers? ☐ Yes ☐ No

If Yes, the sum of 125% of the inverter output circuit currents and the rating of the overcurrent device protecting the busbar shall not exceed 120% of the ampacity of the busbar.

If No, the sum of ampere rating of the two PV overcurrent devices shall not exceed the rating of the busbar.

Solar PV Standard Plan — Simplified
Central/String Inverter Systems for One- and Two-Family Dwellings

△TAG	DESCRIPTION
1	SOLAR PV MODULE / STRING
2	DC/DC CONVERTERS INSTALLED? YES / NO (IF YES, STEPS 6 & 8 REQUIRED)
3	SOURCE CIRCUIT JUNCTION BOX INSTALLED?: YES / NO
4	SEPARATE DC DISCONNECT INSTALLED?: YES / NO
5	INTERNAL INVERTER DC DISCONNECT: YES / NO
6	CENTRAL INVERTER
7	*SEPARATE AC DISCONNECT INSTALLED?: YES / NO
8	TO LOAD CENTER ON LINE DIAGRAM 1

* Consult with your local AHJ and /or Utility

SINGLE-LINE DIAGRAM #3 – ADDITIONAL INVERTER FOR DIAGRAM #1

INVERTER # 2

CHECK A BOX FOR WHETHER SYSTEM IS GROUNDED OR UNGROUNDED: ☐ GROUNDED (INCLUDE GEC)

REFER TO STEP 16 FOR RAPID SHUTDOWN DETAILS ☐ UNGROUNDED

FOR UNGROUNDED SYSTEMS:
- DC OCPD MUST DISCONNECT BOTH CONDUCTORS OF EACH SOURCE CIRCUIT
- UNGROUNDED CONDUCTORS MUST BE IDENTIFIED PER 210.5(C). WHITE-FINISHED CONDUCTORS ARE NOT PERMITTED.

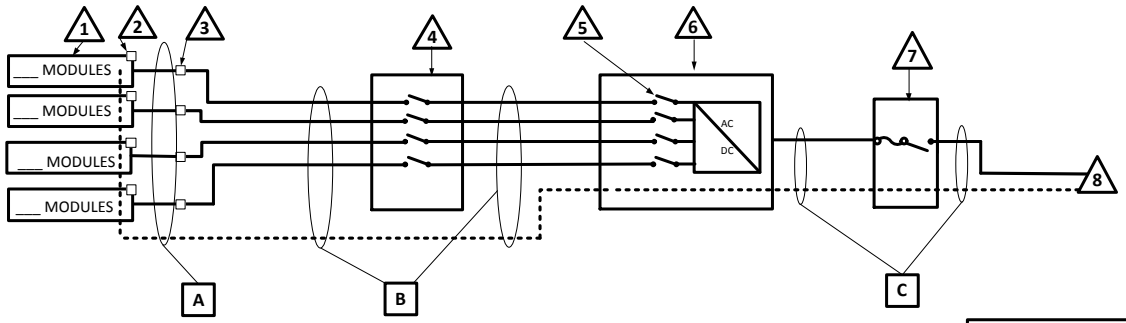

IF DC/DC CONVERTERS ARE USED, CHECK THE BOX BELOW THE CORRESPONDING CONFIGURATION

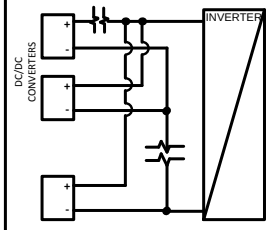

☐ PARALLEL DC/DC CONVERTERS ON ONE SOURCE CIRCUIT (FIXED UNIT VOLTAGE DC/DC CONVERTERS)

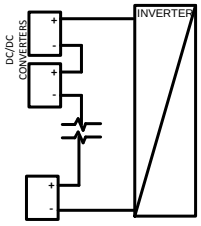

☐ DC/DC CONVERTERS ARE ALL RUN IN SERIES (FIXED SOURCE CIRCUIT VOLTAGE DC/DC CONVERTERS)

CONDUCTOR/CONDUIT SCHEDULE

☐ TAG	DESCRIPTION AND CONDUCTOR TYPE	CONDUCTOR SIZE	NUMBER OF CONDUCTORS	CONDUIT/CABLE TYPE	CONDUIT SIZE
A	USE-2 ☐ OR PV-WIRE ☐				
	EGC/GEC:				
B					
	EGC/GEC:				
C					
	EGC/GEC:				

ENTER "N/A" WHERE SUITABLE FOR WHEN NOT USING CONDUIT OR CABLE AS PERMITTED BY CODE

Field Code Changed

Solar PV Standard Plan — Simplified
Central/String Inverter Systems for One- and Two-Family Dwellings

TAG	DESCRIPTION
1	SOLAR PV MODULE / STRING
2	DC/DC CONVERTERS INSTALLED? YES / NO (IF YES, STEPS 6 & 8 REQUIRED)
3	SOURCE CIRCUIT JUNCTION BOX INSTALLED?: YES / NO
4	COMBINER BOX (STEPS 11 & 12 REQUIRED)
5	SEPARATE DC DISCONNECT INSTALLED?: YES / NO
6	INTERNAL INVERTER DC DISCONNECT: YES / NO
7	CENTRAL INVERTER
8	*SEPARATE AC DISCONNECT INSTALLED?: YES / NO
9	TO LOAD CENTER ON LINE DIAGRAM 3

* Consult with your local AHJ and /or Utility

SINGLE-LINE DIAGRAM #4 – ADDITIONAL INVERTER FOR DIAGRAM #2

INVERTER # 2

CHECK A BOX FOR WHETHER SYSTEM IS GROUNDED OR UNGROUNDED: ☐ GROUNDED (INCLUDE GEC)

REFER TO STEP 16 FOR RAPID SHUTDOWN DETAILS ☐ UNGROUNDED

FOR UNGROUNDED SYSTEMS:
- DC OCPD MUST DISCONNECT BOTH CONDUCTORS OF EACH SOURCE CIRCUIT
- UNGROUNDED CONDUCTORS MUST BE IDENTIFIED PER 210.5(C). WHITE-FINISHED CONDUCTORS ARE NOT PERMITTED.

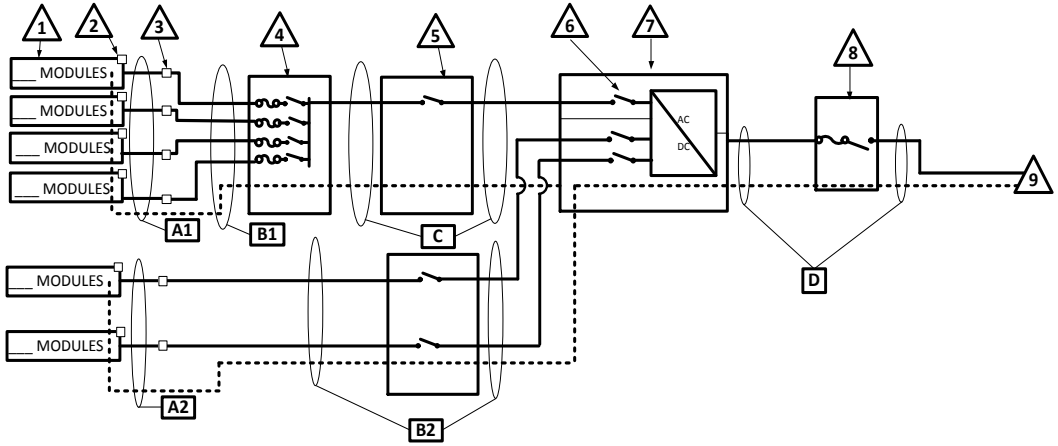

COMBINER CONDUCTOR/CONDUIT SCHEDULE					
☐ TAG	DESCRIPTION AND CONDUCTOR TYPE	CONDUCTOR SIZE	NUMBER OF CONDUCTORS	CONDUIT/CABLE TYPE	CONDUIT SIZE
A1	USE-2 ☐ OR PV-WIRE ☐				
	EGC/GEC:				
B1					
	EGC/GEC:				
C					
	EGC/GEC:				
D					
	EGC/GEC:				

NON-COMBINED STRINGS CONDUCTOR/CONDUIT SCHEDULE (IF APPLICABLE)					
☐ TAG	DESCRIPTION AND CONDUCTOR TYPE	CONDUCTOR SIZE	NUMBER OF CONDUCTORS	CONDUIT/CABLE TYPE	CONDUIT SIZE
A2	USE-2 ☐ OR PV-WIRE ☐				
	EGC/GEC:				
B2					
	EGC/GEC:				

ENTER "N/A" WHERE SUITABLE FOR WHEN NOT USING CONDUIT OR CABLE AS PERMITTED BY CODE

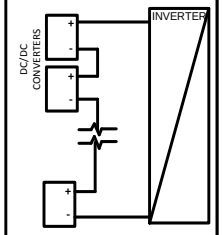

IF DC/DC CONVERTERS ARE USED, THEY ARE RUN IN SERIES (FIXED SOURCE CIRCUIT VOLTAGE DC/DC CONVERTERS)

Field Code Changed

SOLAR PV STANDARD PLAN

Roof Layout Diagram for One- and Two-Family Dwellings

Items required: roof layout of all panels, modules, clear access pathways and approximate locations of electrical disconnecting means, roof access points, and rapid shutdown initiation device.

PV TOOLKIT DOCUMENT #4

Your City logo here

Solar PV Standard Plan — Simplified Microinverter and ACM Systems for One- and Two-Family Dwellings

SCOPE: Use this plan ONLY for systems using utility-interactive Microinverters or AC Modules (ACM) not exceeding a combined system AC inverter output rating of 10 kW, with a maximum of 3 branch circuits, one PV module per inverter and with PV module ISC maximum of 10-A DC, installed on a roof of a one- or two-family dwelling or accessory structure. The photovoltaic system must interconnect to a single-phase AC service panel of 120/240 Vac with service panel bus bar rating of 225 A or less. This plan is not intended for bipolar systems, hybrid systems or systems that utilize storage batteries, charge controllers or trackers. Systems must be in compliance with current California Building Standards Codes and local amendments of the authority having jurisdiction (AHJ). Other articles of the California Electrical Code (CEC) shall apply as specified in section 690.3.

MANUFACTURER'S SPECIFICATION SHEETS MUST BE PROVIDED for proposed inverters, modules, combiner/junction boxes and racking systems. Installation instructions for bonding and grounding equipment shall be provided and local AHJs may require additional details. Listed and labeled equipment shall be installed and used in accordance with any instructions included in the listing or labeling (CEC 110.3). Equipment intended for use with PV system shall be identified and listed for the application CEC 690.4(D).

Applicant and Site Information

Job Address:_____Permit #: _____

Contractor/Engineer Name:_____License # and Class: _____

Signature:_____Date:_____Phone Number: _____

1. General Requirements and System Information

☐ Microinverter
Number of PV modules installed: _____
Number of Microinverters installed: _____

☐ AC Module (ACM)
Number of ACMs installed: _____
*Note: Listed Alternating-Current Module (ACM) is defined in **CEC 690.2** and installed per **CEC 690.6***

1.1 Number of Branch Circuits, 1, 2 or 3: _____

1.2 Actual number of Microinverters or ACMs per branch circuit: 1_____2._____3._____

1.3 Total AC system power rating = (Total Number of Microinverters or ACMs) * (AC inverter power output) =_____Watts

1.4 Lowest expected ambient temperature for this plan in Table 1: For -1° to -5° C use 1.12 or for -6° to -10° C use 1.14 correction factors.

1.5 Average ambient high temperature for this plan: = +47° C
Note: For lower expected ambient or higher average ambient high temperatures, use Comprehensive Standard Plan.

2. Microinverter or ACM Information and Ratings

Microinverters with ungrounded DC inputs shall be installed in accordance with CEC 690.35.

Microinverter or ACM Manufacturer: _____

Model: _____

2.1 Rated (continuous) AC output power:_____Watts

2.2 Nominal AC voltage rating:_____Volts

2.3 Rated (continuous) AC output current:_____Amps

If installing ACMs, skip [STEPS 2.4]

2.4 Maximum DC input voltage rating:_____Volts (limited to 79 V, otherwise use the Comprehensive Standard Plan)

2.5 Maximum AC output overcurrent protection device (OCPD)_____Amps

2.6 Maximum number of microinverters or ACMs per branch circuit: _____

3. PV Module Information

(If installing ACMs, skip to [STEP 4])

PV Module Manufacturer: _____

Model: _____

Module DC output power under standard test conditions (STC) =_____Watts

3.1 Module V_{OC} at STC (from module nameplate):_____Volts

3.2 Module I_{SC} at STC (from module nameplate):_____Amps

3.3 Adjusted PV Module DC voltage at minimum temperature = [Table 1]_____[cannot exceed Step 2.4]

Table 1. Module V_{OC} at STC Based on Inverter Maximum DC Input Voltage Derived from CEC 690.7

Microinverter Max. DC Input [STEP 2.4] (Volts)	34	37	40	43	46	49	52	55	58	61	64	67	70	73	76	79
Max. Module VOC @ STC, 1.12 (-1° to -5° C) Correction Factor (Volts)	30.4	33.0	35.7	38.4	41.1	43.8	46.4	49.1	51.8	54.5	57.1	59.8	62.5	65.2	67.9	70.5
Max. Module VOC @ STC, 1.14 (-6° to -10° C) Correction Factor (Volts)	29.8	32.5	35.1	37.7	40.4	43.0	45.6	48.2	50.9	53.5	56.1	58.8	61.4	64.0	66.7	69.3

4. Branch Circuit Output Information

Fill in [Table 3] to describe the branch circuit inverter output conductor and OCPD size. Use [Table 2] for determining the OCPD and Minimum Conductor size.

Table 2. Branch Circuit OCPD and Minimum Conductor Size*

Circuit Current (Amps)	Circuit Power (Watts)	OCPD (Amps)	Minimum Conductor Size (AWG)	Minimum Metal Conduit Size for 6 Current Carrying Conductors
12	2880	15	12	¾”
16	3840	20	10	¾”
20	4800	25	8	1”
24	5760	30	8	1”

*CEC 690.8 and 210.19 (A)(1) factored in Table 2, conductors are copper, insulation must be 90° C wet-rated. Table 2 values are based on maximum ambient temperature of 69° C, which includes 22° C adder, exposed to direct sunlight, mounted > 0.5 inches above rooftop, ≤ 6 current carrying conductors (3 circuits) in a circular raceway. Otherwise use Comprehensive Standard Plan.

Table 3. PV Array Configuration Summary			
	Branch 1	Branch 2	Branch 3
Number of Microinverters or ACMs [Step 1]			
Selected Conductor Size [Table 2] (AWG)			
Selected Branch and Inverter Output OCPD [Table 2]			

5. Solar Load Center (if used)

5.1 Solar Load Center is to have a bus bar rating not less than 100 Amps. Otherwise use Comprehensive Standard Plan.

5.2 Circuit Power see [STEP 1] =_____Watts

5.3 Circuit Current = (Circuit Power) / (AC voltage) =_____Amps

Table 4. Solar Load Center and Total Inverter Output OCPD and Conductor Size**				
Circuit Current (Amps)	Circuit Power (Watts)	OCPD (Amps)	Minimum Conductor Size (AWG)	Minimum Metal Conduit Size
24	5760	30	10	½"
28	6720	35	8	¾"
32	7680	40	8	¾"
36	8640	45	8	¾"
40	9600	50	8	¾"
41.6	≤ 10000	60	6	¾"

**CEC 690.8 and 210.19 (A)(1) factored in Table 4, conductors are copper, insulation must be 90° C wet-rated. Table 4 values are based on maximum ambient temperature of 47° C (no rooftop temperature adder in this calculation), ≤ 3 current carrying conductors in a circular raceway. Otherwise use Comprehensive Standard Plan.

6. Point of Connection to Utility:

6.1 Load Side Connection only! Otherwise use the Comprehensive Standard Plan.

6.2 Is the PV OCPD positioned at the opposite end from input feeder location or main OCPD location?
☐ Yes ☐ No (If No, then use 100% row in Table 5)

6.3 Per 705.12(D)(2): (Combined inverter output OCPD size + Main OCPD size) ≤ [bus bar size × (100% or 120%)]

Table 5. Maximum Combined Inverter Output CIrcuit OCPD									
Bus Bar Size (Amps)	100	125	125	200	200	200	225	225	225
Main OCPD (Amps)	100	100	125	150	175	200	175	200	225
Maximum Combined Inverter OCPD with 120% of bus bar rating (Amps)	20	50	25	60†	60†	40	60†	60†	45
Maximum Combined Inverter OCPD with 100% of bus bar rating (Amps)	0	25	0	50	25	0	50	25	0

†This plan limits the maximum system size to less than 10 kW, therefore the OCPD size is limited to 60 A. Reduction of Main Breaker is not permitted with this plan.

7. Grounding and Bonding

Check one of the boxes for whether system is grounded or ungrounded: ☐ Grounded ☐ Ungrounded

For Microinverters with a grounded DC input, systems must follow the requirements of GEC (CEC 690.47) and EGC (CEC 690.43).

For ACM systems and Microinverters with ungrounded a DC input follow the EGC requirements of (CEC690.43).

8. Markings

Informational note: ANSI Z535.4 provides guidelines for the design of safety signs and labels for application to products. A phenolic plaque with contrasting colors between the text and background would meet the intent of the code for permanency. No type size is specified, but 20 point (3/8") should be considered the minimum.

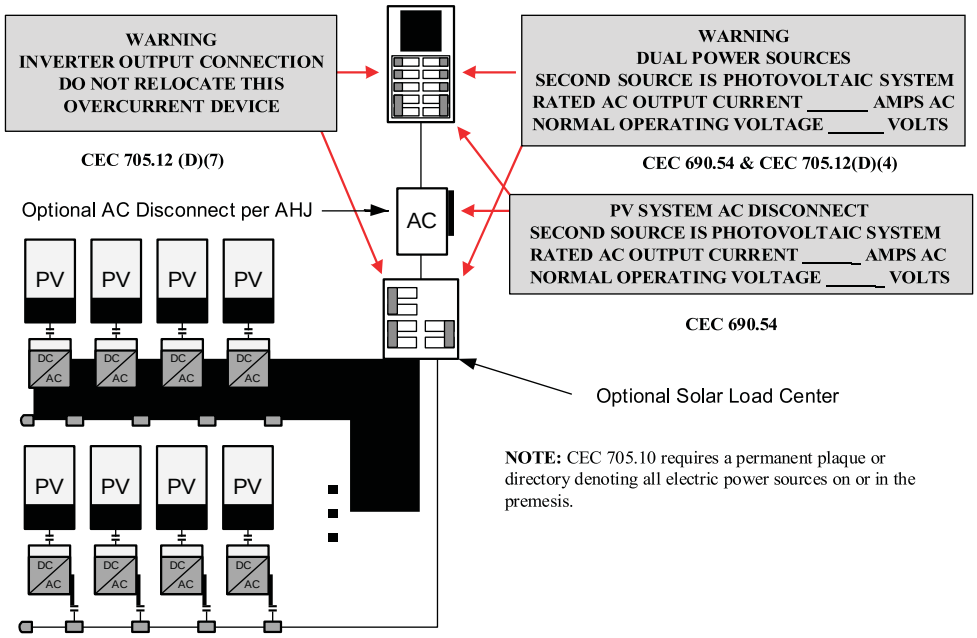

Solar PV Standard Plan — Simplified
Central/String Inverter Systems for One- and Two-Family Dwellings

9. Single-Inverter Line Diagram

Equipment Schedule

△ TAG	DESCRIPTION: (Provide model # if provided)
1	Solar PV Module or ACM:
2	Microinverter (if not ACM):
3	Junction Box (es):
4	Solar Load Center, Yes / No:
5	Performance Meter Yes / No:
6	*Utility External Disconnect Switch Yes / No:
7	Main Electrical Service Panel

Single-Line Diagram for Microinverters or ACMs

Check a box for dc system grounding: ☐ Grounded, ☐ Ungrounded
For ungrounded dc power systems, EGC is required
For grounded dc power systems, GEC & EGC are required
Refer to CEC 250.120 for EGC installation & Table 250.122 for sizing

* Consult with your local AHJ and /or Utility

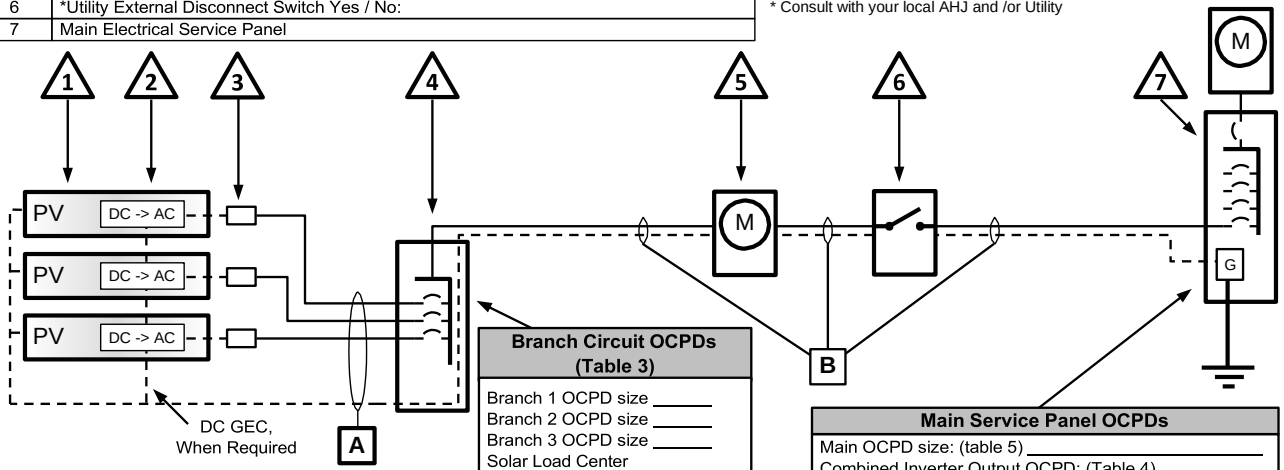

Branch Circuit OCPDs (Table 3)

Branch 1 OCPD size _____
Branch 2 OCPD size _____
Branch 3 OCPD size _____
Solar Load Center
Busbar(Section 5) _____

Main Service Panel OCPDs

Main OCPD size: (table 5) _____
Combined Inverter Output OCPD: (Table 4)_____
Main Service Panel Busbar: (Table 5) _____

Conductor, Cable and Conduit Schedule

TAG	Description and Conductor Type: (Table 3)	Conductor Size	Number of Conductors	Conduit/ Conductor/ Cable Type	Conduit Size
A	Current-Carrying Conductors: (for each branch circuit)				
	EGC:				
	GEC (when required):				
B	Current-Carrying Conductors:				
	EGC:				
	GEC (when required):				

SOLAR PV STANDARD PLAN — SIMPLIFIED

Microinverter and ACM Systems for One- and Two-Family Dwellings

ROOF LAYOUT PLAN

Items required: roof layout of all panels, modules, clear access pathways and approximate locations of electrical disconnecting means and roof access points.

PV TOOLKIT DOCUMENT #5

Your City logo here

Structural Criteria for Residential Rooftop Solar Energy Installations

Use of this document

This toolkit document includes a one-page list of structural criteria for over-the-counter or online approval, as well as attached tables and figures that supplement the criteria and explain their use.

This document applies to flush-mounted solar arrays installed on the roofs of wood-framed one- and two-family dwellings. "Flush-mounted" means the modules are installed parallel to, and relatively close to, the roof surface (see the "Solar Array Check" section of the Structural Criteria for specific qualifying requirements). This list is intended to be a simple pre-installation check to gain reasonable assurance that the design of the solar array complies with the structural provisions of the 2016 California Building Code (CBC) and 2016 California Residential Code (CRC). It is not intended to provide post-installation inspection criteria.

Currently Used Expedited Solar Permitting Approaches

This document is intended for jurisdictions without an expedited process for residential solar structural permitting, and is not intended to replace or supplant procedures for jurisdictions with an expedited process already in place. Good examples from jurisdictions with provisions for expedited structural permitting include the City of Los Angeles, which exempts residential solar installations from structural permitting if five simple requirements are met, and the East Bay Green Corridor's streamlined solar permitting process, which uses structural criteria tailored to typical conditions for that consortium of nine cities.

Regional and Site Assumptions

This document is based on the following regional and site assumptions:

- The dwelling is located in a ZERO snow load area (see Map 1).
- The dwelling is not in Wind Exposure D (within 200 yards of the ocean or a large coastal bay).
- If in Wind Exposure B (urban, suburban or wooded areas), the dwelling may be located:
  - in a Special Wind Region (see Map 2) with design wind speeds between 110 and 130 mph.
  - on a tall hill, provided average slope is no steeper than 15%.
- If in Wind Exposure C (within 500 yards of large open fields or grasslands), the dwelling is:
  - in a standard 110 mph design wind speed region.
  - not on a hill with a grade steeper than 5%.

Additional Options

The Chief Building Official (CBO) may consider adding rows to the structural criteria, based on personal judgment and their jurisdiction's conditions and history. Possible additional questions include:

- Regional and Site Checks
  - If the jurisdiction is in a mixed snow load area, with zero snow load only at lower elevations, consider asking, "Is the dwelling lower than elevation_feet?"

(Introductory text provided for jurisdiction's reference only. Do not attach to Criteria that follow.)

- If the jurisdiction is in a coastal region, consider asking, "Is the dwelling farther than 200 yards from the ocean or a large coastal bay?" to verify the dwelling is not in Wind Exposure D.
- If the jurisdiction is in a Special Wind Region with design wind speeds between 115 and 130 mph, consider verifying that the dwelling is in Wind Exposure B by asking, "Is the dwelling in an urban, suburban or wooded area, and *not* within 500 yards of open fields and grasslands?"
- If the jurisdiction is in a Special Wind Region with design wind speeds between 115 and 130 mph, consider verifying that there are no significant topographic wind speed-up effects by asking, "Is the dwelling in a relatively flat area (grade less than 5%) and not within 500 yards of the crest of a tall hill?"

- Roof Check
  - Based on the jurisdiction's one- and two-family housing stock and code compliance history, many CBOs will find it reasonable to assume that most dwellings' roof structures were designed to the building code in effect at the time the houses were built. If so, the roof structure code compliance check consists of the Contractor's visual roof audit, checking for unusual sagging or deterioration, without requiring additional measurements of existing rafters to check against span tables.
  - For CBOs of jurisdictions with evidence of structurally deficient one- and two-family housing stock or poor structural code compliance history, the CBO may elect to add the rafter span check option described in the criteria.

The Structural Toolkit and CRC Wind Speeds

The 2013 CRC contained an inconsistency related to wind speeds. Despite referencing ASCE 7-10 as its standard, the 2016 CRC's text and tables use outdated ASCE 7-05 wind speeds. Under the old ASCE 7-05/CBC 2010, the basic design wind speed in most regions of the state was 85 mph (max. 3 second gust in 50 years).
Under ASCE 7-10/CBC 2016, the design wind speed has increased to 110 mph (max. 3 second gust in 700 years). Despite the different definitions of wind speed, design wind pressures remain essentially unchanged.

Because the toolkit's structural document is intended to be forward looking, all wind speeds in the toolkit document are based on the ASCE 7-10. This is clearly stated in the caption to the state wind speed map, and in the Table 1 footnotes. This anticipates an obvious and expected correction to the CRC; otherwise the toolkit would become immediately outdated when the CRC is amended to change the base design wind speed from 85 mph to 110 mph.

2013 CRC text (ASCE 7-05) wind speeds equivalent to the 2016 CRC and CBC Reference Standard (ASCE 7-10) are shown below. See ASCE 7-10 Table C26.5-6 for additional information.

2013 CRC text Standard ASCE 7-05	2016 CRC and CBC Referenced ASCE 7-10
85 mph	110 mph
90 mph	115 mph
95 mph	120 mph
100 mph	126 mph
105 mph	133 mph

(Introductory text provided for jurisdiction's reference only. Do not attach to Criteria that follow.)

Structural Technical Appendix

This toolkit document is supported by a Structural Technical Appendix that describes the technical analysis behind these criteria, which are based on structural engineering principles and the California Building and Residential Codes. The Technical Appendix also provides some additional guidance to address non-conforming items, such as when an anchor layout is not based on a solar support component manufacturer's guidelines, or when a coastal site is located within 200 yards of the ocean (Exposure D). This document can be found **online**.

Probability of Code Compliance

The Structural Technical Appendix includes a section that examines the probabilities associated with the assumptions behind Table 1 that allows six feet cross-slope anchor spacing in some circumstances. That statistical analysis estimates that the probability of code noncompliance for six feet anchor spacing is only 2 in a thousand installations (0.2%). Note that probability of structural failure is orders of magnitude lower than the probability of code *noncompliance*.

(Introductory text provided for jurisdiction's reference only. Do not attach to Criteria that follow.)

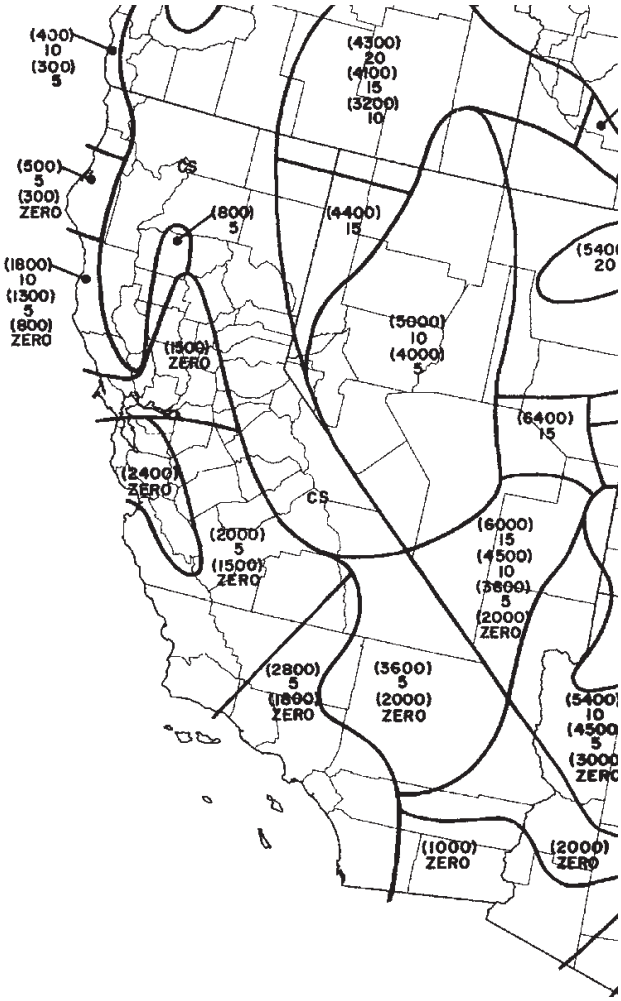

Map 1. California Ground Snow Load Map (Ref: ASCE 7-10).
The numbers in parentheses represent the upper elevation limits in feet for the ground snow load in psf listed below the elevation. Example: (2400) ZERO in the South San Francisco Bay Area indicates that zero ground snow loads occur from sea level up to an elevation of 2,400 feet. CS indicates "Case Studies" where extreme local variations in ground snow loads occur. Non-zero snow load areas and CS areas are excluded from the use of this structural toolkit document. See the Technical Appendix for additional information.

(Map provided for jurisdiction's reference only. Do not attach to Criteria that follow.)

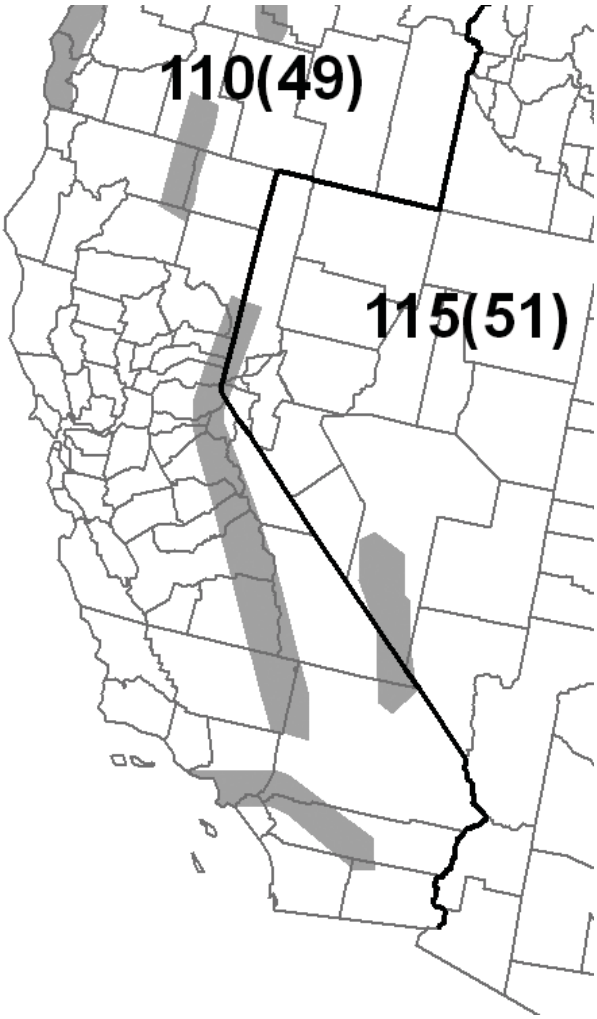

Map 2. California Design Wind Speed Map (Ref: ASCE 7-10).

The number outside the parentheses represents the design wind speed in mph. Typical design wind speed is 110 mph. The gray shaded areas on the map indicate "Special Wind Regions" where higher wind speeds may apply. When the project is in a gray shaded area, contact the local building department for the design wind speed.

(Map provided for jurisdiction's reference only. Do not attach to Criteria that follow.)

STRUCTURAL CRITERIA FOR RESIDENTIAL FLUSH-MOUNTED SOLAR ARRAYS

1. ROOF CHECKS

A. Visual Review/Contractor's Site Audit of Existing Conditions:
- 1) Is the roof a single roof without a reroof overlay? ☐ Y ☐ N
- 2) Does the roof structure appear structurally sound, without signs of alterations or significant structural deterioration or sagging, as illustrated in Figure 1? ☐ Y ☐ N

B. Roof Structure Data:
- 1) Measured roof slope (e.g. 6:12): _____:12
- 2) Measured rafter spacing (center-to-center): _____inch
- 3) Type of roof framing (rafter or manufactured truss): ☐ Rafter ☐ Truss

2. SOLAR ARRAY CHECKS

A. Flush-mounted Solar Array:
- 1) Is the plane of the modules (panels) parallel to the plane of the roof? ☐ Y ☐ N
- 2) Is there a 2" to 10" gap between underside of module and the roof surface? ☐ Y ☐ N
- 3) Modules do not overhang any roof edges (ridges, hips, gable ends, eaves)? ☐ Y ☐ N

B. Do the modules plus support components weigh no more than: 4 psf for photovoltaic arrays or 5 psf for solar thermal arrays? ☐ Y ☐ N

C. Does the array cover no more than half of the total roof area (all roof planes)? ☐ Y ☐ N

D. Are solar support component manufacturer's project-specific completed worksheets, tables with relevant cells circled, or web-based calculator results attached? ☐ Y ☐ N

E. Is a roof plan of the module and anchor layout attached? (see Figure 2) ☐ Y ☐ N

F. Downward Load Check (Anchor Layout Check):
- 1) Proposed anchor horizontal spacing (see Figure 2): ____' - ____"ft-in
- 2) Horizontal anchor spacing per Table 1: ____' - ____"ft-in
- 3) Is proposed anchor horizontal spacing equal to or less than Table 1 spacing? ☐ Y ☐ N

G. Wind Uplift Check (Anchor Fastener Check):
- 1) Anchor fastener data (see Figure 3):
  - a. Diameter of lag screw, hanger bolt or self-drilling screw: _____inch
  - b. Embedment depth of rafter: _____inch
  - c. Number of screws per anchor (typically one): _____
  - d. Are 5/16" diameter lag screws with 2.5" embedment into the rafter used, OR does the anchor fastener meet the manufacturer's guidelines? ☐ Y ☐ N

3. SUMMARY

☐ A. All items above are checked YES. No additional calculations are required.
☐ B. One or more items are checked NO. Attach project-specific drawings and calculations stamped and signed by a California-licensed civil or structural engineer.

Job Address: _____ Permit #: _____
Contractor/Installer: _____ License # & Class: _____
Signature:_____Date: _____ Phone #: _____

Optional Additional Rafter Span Check Criteria

[At option of CBO, insert rows (4) to (7) below into table above after row 1.B.(3)]

1. ROOF CHECKS

B. Roof Structure Data:
- 4) Measured rafter size (e.g. 13/4 x 33/4, not 2x4): ____ x ____ inch
- 5) Measured rafter horizontal span (see Figure 4): ____' - ____"ft-in
- 6) Horizontal rafter span per Table 2: ____' - ____"ft-in
- 7) Is measured horizontal rafter span less than Table 2 span? ☐ Y ☐ N ☐ Truss

(Jurisdictions may delete "Optional Additional Rafter Span Check" at bottom of this page, or incorporate into main list of Structural Criteria above.)

Table 1. Maximum Horizontal Anchor Spacing				
Roof Slope		Rafter Spacing		
		16” o.c.	24” o.c.	32” o.c.
Photovoltaic Arrays (4 psf max)				
Flat to 6:12	0° to 26°	5’-4”	6’-0”	5’-4”
7:12 to 12:12	27° to 45°	1’-4”	2’-0”	2’-8”
13:12 to 24:12	46° to 63°	1’-4”	2’-0”	2’-8”
Solar Thermal Arrays (5 psf max)				
Flat to 6:12	0° to 26°	4’-0”	4’-0”	5’-4”
7:12 to 12:12	27° to 45°	1’-4”	2’-0”	2’-8”
13:12 to 24:12	46° to 63°	Calc. Req’d	Calc. Req’d	Calc. Req’d

Solar support component manufacturer’s guidelines may be relied upon to ensure the array above the roof is properly designed, but manufacturer’s guidelines typically do NOT check to ensure that the roof itself can support the concentrated loads from the solar array. Table 1 assumes that the roof complied with the building code in effect at the time of construction, and places limits on anchor horizontal spacing to ensure that a roof structure is not overloaded under either downward loads or wind uplift loads. Note 4 below lists the basic assumptions upon which this table is based.

Table 1 Notes:

1. Anchors are also known as “stand-offs,” “feet,” “mounts” or “points of attachment.” Horizontal anchor spacing is also known as “cross-slope” or “east-west” anchor spacing (see Figure 2).
2. If anchors are staggered from row-to-row going up the roof, the anchor spacing may be twice that shown above, but no greater than 6’-0”.
3. For manufactured plated wood trusses at slopes of flat to 6:12, the horizontal anchor spacing shall not exceed 4’-0” and anchors in adjacent rows shall be staggered.
4. This table is based on the following assumptions:
    - The roof structure conformed to building code requirements at the time it was built.
    - The attached list of criteria is met.
    - Mean roof height is not greater than 40 feet.
    - Roof sheathing is at least 7/16” thick oriented strand board or plywood. 1x skip sheathing is acceptable.
    - If the dwelling is in Wind Exposure B (typical urban, suburban or wooded areas farther than 500 yards from large open fields), no more than one of the following conditions apply:
        - The dwelling is located in a Special Wind Region with design wind speed between 115 and 130 mph per ASCE 7-10.
        - The dwelling is located on the top half of a tall hill, provided average slope is less than 15%.
    - If the dwelling is in Wind Exposure C (within 500 yards of large open fields or grasslands), all of the following conditions apply.
        - Design wind speed is 110 mph or less (not in a Special Wind Region).
        - The dwelling is not located on the top half of a tall hill.
    - The solar array displaces roof live loads (temporary construction loads) that the roof was originally designed to carry.
    - The Structural Technical Appendix provides additional information about analysis assumptions.

Table 2. Roof Rafter Maximum Horizontal Span (feet - inches)1								
Assumed Vintage	Nominal Size	Actual Size	Non-Tile Roof[2]			Tile Roof[3]		
			Rafter Spacing					
			16” o.c.	24” o.c.	32” o.c.	16” o.c.	24” o.c.	32” o.c.
Post-1960	2x4	1½”x3½”	9’-10”	8’-0”	6’-6”	8’-6”	6’-11”	5’-6”
	2x6	1½”x5½”	14’-4”	11’-9”	9’-6”	12’-5”	10’-2”	8’-0”
	2x8	1½”x7¼”	18’-2”	14’-10”	12’-0”	15’-9”	12’-10”	10’-3”
Pre-1960	2x4	1¾”x3¾”	11’-3”	9’-9”	7’-9”	10’-3”	8’-6”	6’-9”
	2x6	1¾”x5¾”	17’-0”	14’-0”	11’-3”	14’-9”	12’-0”	9’-9”
	2x8	1¾”x7¾”	22’-3”	18’-0”	14’-6”	19’-0”	15’-6”	12’-6”

Beyond a visual review by the contractor checking for unusual sagging or deterioration, some CBOs may want additional assurance that the roof structure complies with structural building code requirements. Table 2 is an optional table some CBOs may elect to use to provide additional assurance by requiring a check of existing roof rafter spans, and supports optional criteria 1.B.5 and 1.B.6. For post-1960 construction, these span tables match the rafter span tables found in the 2016 California Building and Residential codes. For pre-1960 construction, the rafter span tables are based on structural calculations with lumber sizes and wood species and grade appropriate for older construction. Note 5 below lists the basic assumptions upon which this table is based.

Table 2 Notes:

1. See Figure 4 for definition of roof rafter maximum horizontal span.
2. “Non-tile Roof” = asphalt shingle, wood shingle and wood shake, with an assumed roof assembly weight of 10 psf.
3. “Tile Roof” = clay tile or cement tile, with an assumed roof assembly weight of 20 psf
4. Unaltered manufactured plated-wood trusses may be assumed to be code compliant and meet intent of Table 2.
5. This table is based on the following assumptions:
    - Span/deflection ratio is equal to or greater than 180.
    - For post-1960 construction, wood species and grade is Douglas Fir-Larch No. 2.
    - For pre-1960 construction, wood species and grade is Douglas Fir-Larch No. 1.
    - Other wood species and/or grade are also acceptable if allowable bending stress is equal or greater to that listed.

(Attach Table 2 ONLY if the Optional Additional Rafter Span Check is added to the list of Structural Criteria.)

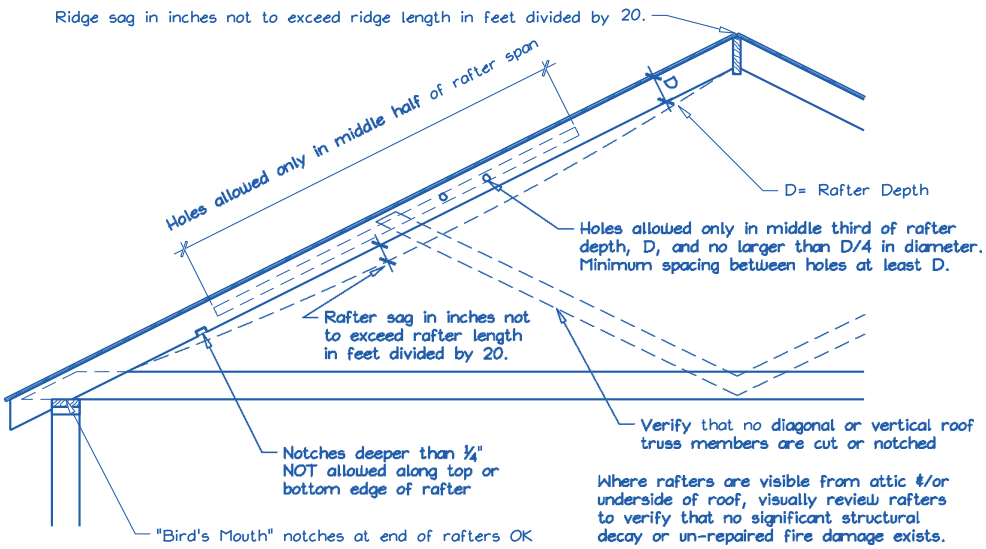

Figure 1. Roof Visual Structural Review (Contractor's Site Audit) of Existing Conditions.

The site auditor should verify the following.

1. No visually apparent disallowed rafter holes, notches and truss modifications as shown above.
2. No visually apparent structural decay or unrepaired fire damage.
3. Roof sag, measured in inches, is not more than the rafter or ridge beam length in feet divided by 20.

Rafters that fail the above criteria should not be used to support solar arrays unless they are first strengthened.

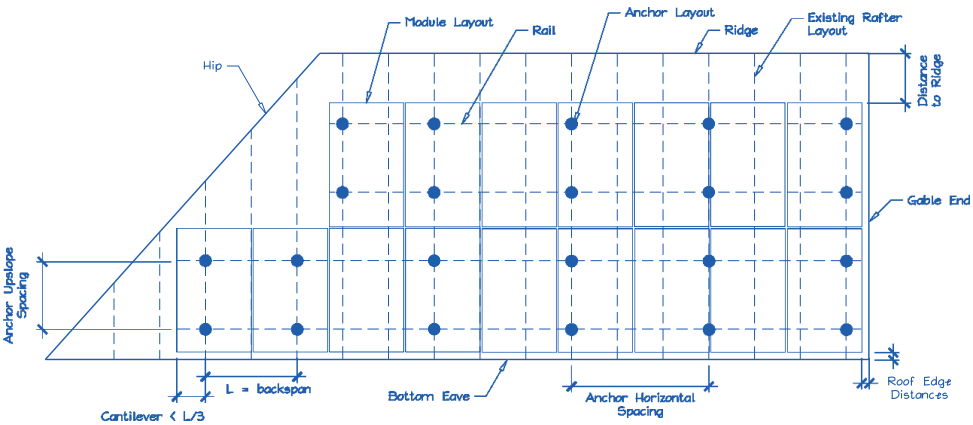

Figure 2. Sample Solar Panel Array and Anchor Layout Diagram (RoofPlan).

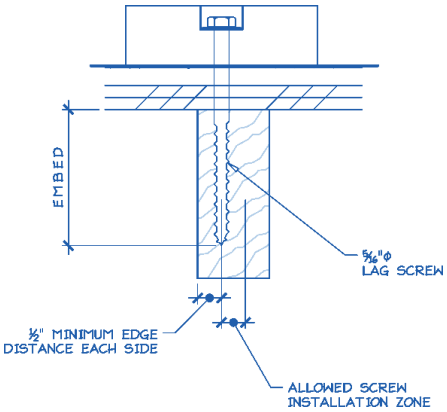

Figure 3. Typical Anchor with Lag Screw Attachment.

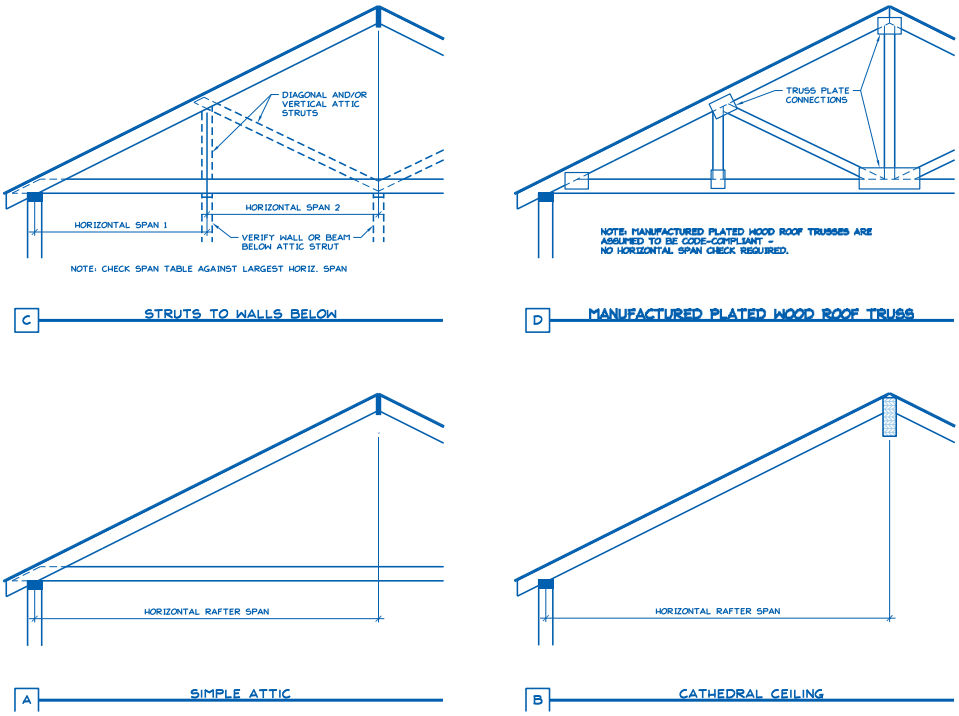

Figure 4. Definition of Rafter Horizontal Span.

(Attach Figure 4 ONLY if the Optional Additional Rafter Span Check is added to the list of Structural Criteria.)

TOOLKIT DOCUMENT #6

Your City logo here

[ADMINISTERING AGENCIES] Agreement Number: [NUMBER]

MOU (Memorandum of Understanding) Regarding Solar Photovoltaic Plan Review and Inspection Services

This memorandum of understanding (MOU) formalizes coordination by local agencies regarding plan review and inspection services for solar photovoltaic installations.

Note: Language in CAPS below indicates where local jurisdiction needs to provide information specific to the jurisdiction.

This agreement is made at [LOCATION], California, by and between [FIRE AUTHORITY] and [BUILDING AUTHORITY].

Recitals

WHEREAS, Sections 1.8.2.1 and 1.11.2 of the currently adopted version of the California Residential Code charges the local building authority and local fire authority with the responsibility of enforcement of residential building standards within the jurisdictions boundaries; and

WHEREAS, the [FIRE AUTHORITY] desires the [BUILDING AUTHORITY] to perform these services on its behalf subject to the following terms and conditions; and

WHEREAS, the [BUILDING AUTHORITY] is willing to perform said services provided it can charge and collect all fees for services rendered subject to the following terms and conditions.

Services Agreement

1. **Services** The [BUILDING AUTHORITY] shall conduct the services outlined in Exhibit A for the review of plans and inspection of solar photo voltaic systems within the [JURISDICTION] boundaries during the term of this agreement.

2. **Term** The term of this agreement shall commence on_____, and shall be for _____. The term of this agreement may be extended upon agreement of [FIRE AUTHORITY] and the [BUILDING AUTHORITY].

3. **Plan Review and Inspection Fees/Charges** The [BUILDING AUTHORITY] shall charge and collect its standard fees for plan review and inspection. The [FIRE AUTHORITY] shall receive no portion of said fees.

4. **Facilities, Equipment and Other Materials** The [BUILDING AUTHORITY] shall, at its cost and expense, furnish all facilities, equipment and other materials that may be required for furnishing services pursuant to this agreement.

5. **No Agency** No agency relationship is created by this agreement.

6. **Records** The [BUILDING AUTHORITY] shall maintain, at all times, complete detailed records with regard to work performed under this agreement. The [FIRE AUTHORITY] shall have the right to inspect said records with reasonable notice to the county. All such records shall be maintained by the [BUILDING AUTHORITY] in its [OFFICE LOCATION] offices.

7. **Insurance** It is agreed that each party shall maintain at all times during the performance of this agreement insurance coverage or self-insurance in the amount of not less than [DOLLAR AMOUNT] to cover all of its operations, including general liability, automobile liability and workers' compensation.

8. **Indemnification** The [BUILDING AUTHORITY] shall indemnify, defend and hold harmless the [FIRE AUTHORITY] and its elected and appointed officials, employees, agents and contractors (collectively, "indemnities") from and against any and all loss, liability, cost, claim, cause of action, demand, judgment, expense (including reasonable attorneys' fees) or damage (collectively "claims")
arising from or related to [BUILDING AUTHORITY] performance or failure to perform its obligations pursuant to this agreement, except to the extent the same are attributable to the gross negligence or willful misconduct of the Indemnities. The [FIRE AUTHORITY] shall indemnify, defend and hold harmless the [BUILDING AUTHORITY] and its elected and appointed officials, employees, agents and contractors (collectively, "building indemnities") from and against any and all claims arising from or related to the [BUILDING AUTHORITY] performance or failure to perform its obligations pursuant to this agreement, except to the extent the same are attributable to the gross negligence or willful misconduct of building indemnities.

9. **Entirety of Agreement – Modifications** This agreement contains the entire agreement of the [FIRE AUTHORITY] and the [BUILDING AUTHORITY] with respect to the subject matter hereof, and no other agreement, statement, or promise made by any party, or to any employee, officer or agent of any party, which is not contained in this agreement, shall be binding or valid.

10. **Early Termination** Either party may serve notice of early termination of this agreement pursuant to Section 11 below. Upon termination of this agreement, the [FIRE AUTHORITY] shall take over all plan review and inspections covered by this agreement. For plan review and/or inspections that are in process at the time of termination, the county shall complete these.

11. **Notice** Any notice or demand desired or required to be given hereunder shall be in writing and deemed given when personally delivered or deposited in the mail, postage prepaid and addressed to the parties as follows:

[BUILDING AUTHORITY ADDRESS]	**[FIRE AUTHORITY ADDRESS]**
_____	_____
_____	_____
_____	_____
_____	_____
Phone: _____	Phone: _____
Fax: _____	Fax: _____

Any notice so delivered personally shall be deemed to be received on the date of delivery, and any notice mailed shall be deemed to be received five (5) days after the date on which it was mailed.

[BUILDING AUTHORITY ADDRESS]	**[FIRE AUTHORITY ADDRESS]**
By:_____	By:_____
Date: _____	Date: _____

Exhibit A – Scope of Work

PV TOOLKIT DOCUMENT #7

Your City logo here

Inspection Guide for PV Systems in One- and Two-Family Dwellings

(For Rooftop Photovoltaic Systems meeting the Standard Plan)

This document has two sections. Neither section is all-inclusive as this document is simply a tool to aid the inspection process.

> SECTION 1 – Field Inspection Guide: The purpose of this section is to give the field inspector a single-page reminder of the most important items in a field inspection.
>
> SECTION 2- Comprehensive Reference: This reference details items that may be relevant in the field inspection of rooftop PV systems that comply with the comprehensive or simplified versions of the "Solar PV Standard Plan." Not all items outlined in this section are relevant to each PV system. This inspection reference details most of the issues that relate to the PV system during the inspection process.

All California Electrical Code (CEC), California Residential Code (CRC), California Building Code (CBC) and California Fire Code (CFC) references are to the 2016 versions unless otherwise noted.

SECTION 1: Field Inspection Guide for Rooftop Photovoltaic (PV) Systems Standard Plan

Make sure all PV system AC/DC disconnects and circuit breakers are in the open position and verify the following.

1. All work done in a neat and workmanlike manner (CEC 110.12).
2. PV module model number, quantity and location according to the approved plan.
3. Array mounting system and structural connections according to the approved plan.
4. Roof penetrations flashed/sealed according to the approved plan.
5. Array exposed conductors are properly secured, supported and routed to prevent physical damage.
6. Conduit installation according to CRC R324 and CEC 690.4.
7. Firefighter access according to approved plan.
8. Roof-mounted PV systems have the required fire classification (CBC 1505.9 or CRC R902.4).
9. Grounding/bonding of rack and modules according to the manufacturer's installation instructions that are approved and listed.
10. Equipment installed, listed and labeled according to the approved plan (e.g., PV modules, DC/DC converters, combiners, inverters, disconnects, load centers and electrical service equipment).
11. For grid-connected systems, inverter is marked "utility interactive."
12. For ungrounded inverters, installation complies with CEC 690.35 requirements.
13. Conductors, cables and conduit types, sizes and markings according to the approved plan.
14. Overcurrent devices are the type and size according to the approved plan.
15. Disconnects according to the approved plan and properly located as required by the CEC.
16. Inverter output circuit breaker is located at opposite end of bus from utility supply at load center and/or service panelboard (not required if the sum of the inverter and utility supply circuit breakers is less than or equal to the panelboard bus rating).
17. PV system markings, labels and signs according to the approved plan.
18. Connection of the PV system to the grounding electrode system according to the approved plan.
19. Access and working space for operation and maintenance of PV equipment such as inverters, disconnecting means and panelboards (not required for PV modules) (CEC 110.26).

SECTION 2: Comprehensive Inspection Reference

GENERAL

1. Module manufacturer, make, model and number of modules match the approved plans. (CBC 107.4)
2. DC PV modules are listed to UL 1703. Ac modules are listed to UL 1703 and UL 1741. (CEC 110.3, 690.4
   & CBC 1510.7 & CRC R918)
3. Modules are attached to the mounting structure according to the manufacturer's instructions and the approved plans. (CEC 110.3[B], CBC 107.4 & CRC R918)
4. Roof penetrations/attachments are properly flashed. (CBC Chapter 15 & 2012 CRC Chapter 9)
5. Rooftop systems are designed in accordance with the CBC. (CBC 1510.7 & CRC R918)
6. Roof access points, paths and clearances need to comply with the CFC. (CFC 605.11.3.1 - 605.11.3.3.3, CRC R331.4.1 through R324)
7. PV installation shall comply with requirements of the standard plan.
8. PV system operating at 80 volts or greater shall be protected by a listed DC arc fault protection. (CEC 690.11)
9. All work done in a neat and workmanlike manner. (CEC 110.12)

ELECTRICAL REQUIREMENTS

PV Array Configuration

10. DC modules are properly marked and labeled. (CEC 110.3, 690.4[D] & 690.51)
11. AC modules are properly marked and labeled. (CEC 110.3, 690.4[D] & 690.52)
12. PV modules are in good condition (i.e., no broken glass or cells, no discoloration, frames not damaged, etc.). (CEC 110.12[B])
13. Residential one and two family dwelling limited to maximum PV system voltage of 600 volts. (CEC 690.7)

Bonding and grounding

14. A complete grounding electrode system is installed. (CEC 690.47[A] & [B])
15. Modules are bonded and grounded in accordance with the manufacturer's installation instructions, that are listed and approved, using the supplied hardware or listed equipment specified in the instructions and identified for the environment. (CEC 690.43 & 110.3[B])
16. Racking systems are bonded and grounded in accordance with the manufacturer's installation instructions, that are listed and approved, using the supplied hardware or listed equipment specified in the instructions and identified for the environment. (CEC 690.43 & 110.3[B])
17. Properly sized equipment grounding conductor is routed with the circuit conductors. (CEC 690.45, 250.134[B] & 300.3[B])
18. AC and DC grounding electrode conductors are properly connected as required by code. Separate electrodes, if used, are bonded together. (CEC 690.47, 250.50 & 250.58)

19. Bonding fittings are used on concentric/eccentric knockouts with metal conduits for circuits over 250 volts. (CEC 250.97) (see also exceptions 1 through 4)

20. Bonding fittings are used for ferrous metal conduits enclosing grounding electrode conductors. (CEC 250.64[E])

PV Source/output Circuit Conductor Management

21. Cables are secured by staples, cable ties, straps, hangers or similar fittings at intervals that do not exceed 4.5 feet. (CEC 334.30 & 338.12[A][3])

22. Cables are secured within 12 inches of each box, cabinet, conduit body or other termination. (CEC 334.30 & 338.12[A][3])

23. Cable closely follows the surface of the building finish or of the running boards. (CEC 690.4 & CFC 605.11.2 & CRC R324) NOTE: see Section 12 below for additional requirements on routing of conductors for fire fighter safety concerns.

24. Exposed single conductors, where subject to physical damage, are protected. (CEC 230.50[B] & 300.5[D])

25. Exposed single conductors used for ungrounded systems are listed and identified as "PV wire." (CEC 690.35[D][3]) For other conductor requirements for ungrounded systems, see CEC 690.35(D).

Conductors

26. Exposed single conductor wiring is a 90° C, wet rated and sunlight resistant type USE-2 or approved/listed PV wire. (CEC 690.31[B] & 110.2) If the wiring is in a conduit, it is 90° C, wet rated type RHW-2, THWN- 2, or XHHW-2. (CEC 310.15)

27. Conductor insulation is rated at 90° C to allow for operation at 70° C+ near modules. (CEC 310.15)

28. Grounded conductor is identified white or gray. (CEC 200.6)

29. Open conductors are supported, secured and protected. (CEC 338.12[A][3] & 334.30)

30. Conductors are not in contact with the roof surface. (CEC 334.30)

31. DC conductors inside a building are in a metal raceway or MC metal-clad cable that complies with 250.118(10), or metal enclosures. (CEC 690.31[E])

32. DC wiring methods shall not be installed within 25 cm (10") of the roof decking or sheathing except where directly below the roof surface covered by the PV modules and associated equipment. (CEC 690.31[E][1])

33. If more than one nominal voltage system conductor is installed in the raceway, permanent identification and labeling is required. (CEC 200.6[D] & 210.5[C])

34. For underground conductor installations, the burial depth is appropriate and warning tape is in place. (CEC 300.5[D][3] & Table 300.5)

35. Aluminum is not placed in direct contact with concrete. (CEC 250.120[B] & 110.11)

36. PV circuit and premises wiring is separated. (CEC 690.4[B])

37. PV system conductors shall be grouped and identified. (CEC 690.4[B])

Overcurrent Protection

38. Overcurrent protection devices (OCPD) in the DC circuits are listed for DC operation. (CEC 110.3[A], [B] & 690.9[D])
39. Overcurrent protection devices shall be provided per the approved plans. (CEC 690.9[A])
40. Combiner box is listed to UL 1741.
41. PV output OCPD is located at the opposite end of the bus from the feeder connection, unless otherwise approved. (CEC 705.12[D][2])

Electrical Connections

42. Crimp terminals are listed and installed using a listed tool specified for use in crimping those specific crimps. (CEC 110.3[B] & 110.14)
43. Pressure terminals are listed for the environment and tightened to manufacturer recommended torque specifications. (CEC 110.11, 110.3[B] & 110.14)
44. Connectors are listed for the voltage of the system and have appropriate temperature and ampere ratings. (CEC 110.3[B] & 110.14)
45. Twist-on wire connectors are listed for the environment (i.e., wet, damp, direct burial, etc.) and installed per manufacturer's instructions. (CEC 110.11, 110.3[B], 110.14 & 300.5[B])
46. Power distribution blocks are listed. (CEC 690.4 & 2014 NEC 314.28[E])
47. Terminals containing more than one conductor are listed for multiple conductors. (CEC 110.14[A] & 110.3[B])
48. Connectors and terminals used other than class B and C stranded conductors (fine stranded conductors) are listed and identified for use with specific conductor class or classes.. (CEC 110.14[A] & 110.3[B])
49. Connectors that are readily accessible and operating at over 30 volts require a tool for opening. (CEC 690.33[C])
50. All connectors are fully engages, tight and secure. (CEC 110.3[B] & 110.12)
51. Wiring and connections of inverters, PV source circuits, etc., and all interconnections are performed by qualified personnel. (CEC 690.4)

Disconnects

52. Disconnects used in DC circuits are listed for DC operation and located as allowed by the AHJ. (CEC 110.3)
53. Disconnects are installed for all current carrying conductors of the PV source. (CEC 690.13 - 690.15 & 690.35)
54. Disconnects are installed for the PV equipment. NOTE: For inverters and other equipment that are energized from more than one source, the disconnecting means must be grouped and identified per AHJ's requirements. (CEC 690.15)
55. Disconnects and overcurrent protection are installed for all ungrounded conductors in ungrounded PV power systems. (CEC 240.15 & 690.35)
56. Where connectors are used as disconnecting means, they shall be used in accordance with CEC 690.33.E (CEC 690.33.E & 690.17)

Inverters

57. Inverters are listed to UL 1741. (CEC 690.4[D]) NOTE: grid-tied system inverters need to be identified for use in interactive power systems.

58. Point of connection is at a dedicated breaker or disconnect. (CEC 705.12[D][1])

59. Where a back-fed breaker is used as a utility interconnection means, the breaker is not marked "line and load." (CEC 110.3[B], 705.12[D][5])

60. Listed AC and DC disconnects and overcurrent protection are grouped and identified. (CEC 690.15)

61. No multiwire branch circuits are installed where single 120-volt inverters are connected to 120/240-volt load centers. (CEC 690.10[C])

62. The barrier is reinstalled between the AC, DC wiring and communication wires. (CEC 110.3[B] & 110.27)

Signs and Labels

63. All interior and exterior DC conduit, enclosures, raceways, cable assemblies, junction boxes, combiner boxes and disconnects are marked. (CFC 605.11.1, CEC 690.31[E], 690.17 & 690.53 & CRC R324)

64. The markings on the conduits, raceways and cable assemblies are every 10 feet, within one foot of all turns or bends and within one foot above and below all penetrations of roof/ceiling assemblies, walls and barriers. (CFC 605.11.1.4, CEC 690.31[E])

65. Marking is placed adjacent to the main service disconnect in a location clearly visible from where the disconnect is operated. (CFC 605.11.1.3 & CRC R324)

66. The markings say "WARNING: PHOTOVOLTAIC POWER SOURCE" and have 3/8-inch (9.5 mm) minimum-sized white letters on a red background. The signs are made of reflective weather resistant material. (CFC 605.11.1.1, 605.11.1.2 & CRC R324 & CEC 690.31)

67. Where PV circuits are embedded in built-up, laminate or membrane roofing materials in roof areas not covered by PV modules and associated equipment, the location of circuits shall be clearly marked. (CEC 690.4)

68. Required labels shall be permanent and suitable for the environment. The following labels are required as applicable.

Table 1. Signage Requirements for PV systems		
Code Section	Location of Label	Text
CEC 690.5(C)	Utility-interactive inverter & battery enclosure	WARNING: ELECTRIC SHOCK HAZARD IF A GROUND FAULT IS INDICATED, NORMALLY GROUNDED CONDUCTORS MAY BE UNGROUNDED AND ENERGIZED
CEC 690.35(F)	All enclosures with ungrounded circuits or devices which are energized and may be exposed during service	WARNING: ELECTRIC SHOCK HAZARD. THE DC CONDUCTORS OF THIS PHOTOVOLTAIC SYSTEM ARE UNGROUNDED AND MAY BE ENERGIZED.
CEC 690.13 – 690.31	On the main service when DC wiring is run through the building and the DC disconnect is located other than at the main service	DC DISCONNECT IS LOCATED….
CEC 690.13 – 690.31	On the AC and DC disconnects	PHOTOVOLTAIC SYSTEM DISCONNECT
CEC 690.53	On the DC disconnects	OPERATING CURRENT _____ OPERATING VOLTAGE _____ MAXIMUM SYSTEM VOLTAGE SHORT CIRCUIT CURRENT _____
CEC 690.54	At interactive points of interconnection, usually the main service	RATED AC OUTPUT CURRENT _____AMPS NORMAL OPERATING AC VOLTAGE _____VOLTS
CEC 690.56(B)/ 690.13-690.31, 705.10 2014 CEC 690.4(D)	At the electrical service and at the PV inverter if not at the same location	A directory providing the location of the service disconnecting means and the photovoltaic system disconnecting means
CEC 690.17	On the DC disconnect and on any equipment that stays energized in the off position from the PV supply	WARNING! ELECTRIC SHOCK HAZARD. DO NOT TOUCH TERMINALS. TERMINALS ON BOTH THE LINE AND LOAD SIDES MAY BE ENERGIZED IN THE OPEN POSITION.
CEC 705.12 (D)(7)	Inverter output OCPD	WARNING: INVERTER OUTPUT CONNECTION DO NOT RELOCATE THIS OVERCURRENT DEVICE.
CFC 605.11.1.4, CEC 690.31(E)(3), 690.31(E)(4), CRC R324	On conduit, raceways and enclosures, mark every 10 feet, at turns, above/ below penetrations	WARNING: PHOTOVOLTAIC POWER SOURCE. *Note: This label shall have a red background with white lettering*

FIRE SAFETY REQUIREMENTS

1. Rooftop-mounted PV panels and modules have the proper fire classification rating. (CBC 1505.9 & CRC R918.1)

2. Conduit, wiring systems and raceways for photovoltaic circuits are located as close as possible to the ridge, hip or valley and from the hip or valley as directly as possible to an outside wall to reduce trip hazards and maximize ventilation opportunities. (CFC 605.11.2 & CRC R324)

3. Conduit runs between sub arrays and to DC combiner boxes are installed in a manner that minimizes total amount of conduit on the roof by taking the shortest path from the array to the DC combiner box. (CFC 605.11.2 & CRC R324)

4. DC Combiner Boxes are located so that conduit runs are minimized in the pathways between arrays. (CFC 605.11.2 & CRC 324)

5. DC wiring in enclosed spaces in buildings is installed in metallic conduit or raceways. Conduit runs along the bottom of load bearing members. (CFC 605.11.2 & CEC 690.4 & CRC R324)

6. All roofs have an access point that does not place ground ladders over openings such as windows or doors, are located at strong points of building construction, and in locations where the access point does not conflict with overhead obstructions such as tree limbs, wires or signs. (CFC 605.11.1.1 & CRC R324)

7. Roofs with slopes greater than 2:12 have solar panel layouts with access pathways that comply with approved roof plan that meet the following criteria: (some exceptions apply, see diagrams in the California Solar Permitting Guidebook)

   A. Hip Roofs: Panels/modules are located so that there is a 3-foot wide clear access pathway from the eave to the ridge on each roof slope where panels/modules are located. (CFC 605.11.1.2.2 & CRC R324)

   B. Hips and Valleys: If panels/modules are placed on both sides of a hip or valley they are located no closer than 18 inches to a hip or valley. If the panels are located on only one side of a hip or valley that is of equal length, then the panels can be placed directly adjacent to the hip or valley. (CFC 605.11.1.2.4 & CRC R324)

   C. Single Ridges: Panels/modules are located so that there are two 3-foot wide access pathways from the eave to the ridge on each roof slope where there are panels/modules installed. (CFC 605.11.1.2.3 & CRC R324)

   D. Ridges: Panels/modules are located no higher than 3 feet from the top of the ridge in order to allow for fire department smoke ventilation operations. (CFC 605.11.1.2.5 & CRC R324)

   E. Access pathways are located at a structurally sound location capable of supporting the load of fire fighters accessing the roof. (CFC 605.11.1 & CRC R324)

STRUCTURAL AND OTHER CODE REQUIREMENTS

List the structural requirements by the Authority Having Jurisdiction.

Part 4

RECOMMENDATIONS FOR EXPEDITED SOLAR WATER HEATING INSTALLATIONS

A streamlined permitting process for residential solar domestic water heating (SDWH) and solar pool heating (SPH) systems that simplifies and consolidates the structural, plumbing and mechanical review of the system can eliminate the need for detailed engineering studies and helps avoid unnecessary delays. Many California local governments have already taken steps to streamline solar permitting, thereby realizing resource savings and a more efficient permitting process. These efforts have helped to inform the following recommendations.

The model streamlined permitting process recommended in this section is intended to apply to SDWH and SPH systems with a maximum thermal output of 30 kilowatts thermal (kWth) equivalent to 462 square feet of collector area or less that meet the requirements of the Eligibility Checklist (SWH Toolkit Documents #2A & 2B). As SDWH systems increase in size and complexity, the ability to handle these projects via a standard framework
diminishes. As a practical matter, the vast majority of one- or two-family residential SDWH systems will have only one to three 32 to 40 square foot collectors, however, residential SPH systems are larger and can approach the 462-square-foot, streamlined permitting maximum depending on the size of the swimming pool. Larger SDWH systems, nonresidential or larger solar pool heating systems exceeding 462 square feet in area, other applications of solar thermal technology (space heating, space cooling, large industrial applications, etc.) or installations with complicating factors can still be approved in a timely manner through a clear and efficient permit review process.

It is not the intent of expedited permitting to circumvent the engineering or code review processes. Rather, the intent of a streamlined process is to recognize that projects that fall within the boundaries set forth in the Eligibility Checklist will utilize virtually identical system configurations, allowing for rapid review and approval.

Pre-certified SDWH system designs eliminate the need for a section-by-section review of system compliance with plumbing and mechanical codes, leading to the following benefits.

1. Relieves counter personnel of the burden and complexity of detailed design review.
2. Relieves the contractor of much of the same engineering effort.
3. Assures that certain critical system and customer protective features are incorporated.
4. Assures substantial compliance with California code requirements.
5. Minimizes permit review costs for both AHJ's and contractors.
6. Creates a consistent, streamlined technical standard requirement and interpretation for all jurisdictions.

A streamlined permitting process for solar water heating projects 30 kWth or less includes, but is not limited to, the following elements.

- Use of a simple eligibility checklist to determine whether projects qualify for expedited permitting.
- Use of a standard plan to describe the proposed solar water heating project in the permit application.
- Use of a site-specific roof plan in the permit application to describe the location of the proposed solar water heating system on the property.
- Use of collectors and/or system designs certified by an accredited listing agency. Use of pre- certified designs for one- and two-family SDWH systems greatly simplifies the plan review process and reduces the chance of error.
- Use of a standard one-line plumbing diagram for solar pool heating systems, including identification and location of each major component using standard component symbols.
- Application submittals, fee payment, signatures and permit issuance completed electronically, where capability exists.
- Use of a streamlined process for structural review by adopting the Guidebook's Structural SWH Toolkit Document #4.
- For eligible projects, plan review and permit issuance are completed "over the counter" for walk- in applications or electronic submittals or automatically through online software. If over-the- counter approval is not offered, 1 to 3 days is the maximum timeframe within which the permit application can be reviewed.
- Permit application materials are made available through the Internet.

A streamlined inspection process for SWH systems should include the following.

- A single, final inspection coordinated among the various agencies or simultaneous inspections by multiple agencies. Typically, this involves coordination between the building department and the plumbing inspection authority. Current CAL FIRE-OSFM setback guidelines apply only to solar PV systems and do not address SWH systems.
- Use of a concise inspection guide that provides permit applicants a clear understanding of which elements of the solar installation will be inspected before final approval of the installation.
- Enable inspection requests to be submitted online or electronically.
- Provide for on-site inspection during the next business day after notification that the solar system has been installed. If inspection on the next business day is not possible, inspection should occur within five days after AHJ receives request.
- Schedule on-site inspection for no more than two hours and utilize phone and/or email communication to provide information on anticipated inspection time.
- Provide current plumbing and mechanical or other applicable codes for reference at the counter and carried by the inspector.

Efficient permitting requires cooperation among local permitting staff and solar contractors. Many local enforcing agencies have provided informational training for agency staff and solar contractors to explain local requirements. This training has resulted in better educated staff and contractors, thereby reducing permit application errors and saving time and resources for the local permitting agency.

SWH Toolkit for Local Governments

The template documents provided in this section form an optional toolkit that local governments can utilize to reduce their costs of permit review, approval and inspection and to ensure a predictable and efficient process for permit applicants. The toolkit includes two separate template documents for SDWH and SPH systems. SWH Toolkit Documents 1 A through 5 A apply to SDWH systems, while SWH Toolkit Documents 1 B through 5 B are for SPH systems.

California Government Code Section 65850.5 requires local governments to adopt an expedited permitting process that "substantially conforms" with the process outlined in this Guidebook. The templates in this toolkit can be adopted in many jurisdictions with only minor administrative adjustments. However, building officials should review these documents and the assumptions on which they are based and make further modifications as necessary to meet the needs of their jurisdiction. Jurisdictions are not required to notify the Building Standards Commission of modifications to these documents when adopted.

Templates for streamlined permitting of SWH systems (30 kWth or less) on one-and two-family homes

- **Submittal Requirements Bulletin** — outlines the necessary steps to secure permits and details what materials must be submitted in the permit application.
- **Eligibility Checklist** — defines the system size, end-use, plumbing, mechanical, electrical and structural requirements for solar installations to qualify for streamlined permitting.
- **Standard Plumbing, Electrical, Structural and Mechanical Plan** — a simple "fill in the blanks" cover sheet to explain the plumbing configuration of a SWH system. This cover sheet should be accompanied by a roof plan, system schematic and a standard plumbing diagram for SPH systems so that reviewers can verify that the planned system complies with the certification and eligibility requirements.

Materials to further improve permitting of SWH systems of all sizes

- **Structural Criteria** — this document is an option that can help ensure structural code compliance for flush-mounted solar arrays. It enables applicants to submit a simple list and supporting documents after conducting a site audit to determine structural conditions. A technical appendix describing the technical analysis behind these criteria is listed in the Additional Resources section.
- **Inspection Checklist** — provides a code reference and field inspection sheet for SWH system inspections.

SWH Toolkit for Local Governments

Template permitting documents that local governments can edit are available at
energycenter.org/permittingtoolkit

SWH TOOLKIT DOCUMENT #1A

Your City logo here

Submittal Requirements Bulletin — Solar Domestic Water Heating Installations 30 kWth or Less for One- and Two-Family Dwellings

This information bulletin is published to guide applicants through a streamlined permitting process for solar domestic water heating (SDWH) projects 30 kWth (462 square foot) in size or smaller. This bulletin provides information about submittal requirements for plan review, required fees and inspections.

*Note: Language in **ALL CAPS** below indicates where local jurisdictions should provide information specific to the jurisdiction. Language in italics indicates explanatory notes from the authors of this Guidebook.*

1. Approval Requirements

The following permits are required to install a SDWH system with a maximum thermal output of 30 kWth or less:

a) [LIST TYPE OF PERMIT(S) REQUIRED BY THE LOCAL JURISDICTION, i.e., PLUMBING OR BUILDING PERMIT.]

Planning review [IS/IS NOT] required for SDWH installations of this size.

2. Submittal Requirements

a) Completed permit application form. This permit application form can be downloaded at [WEBSITE ADDRESS].

b) Demonstrate compliance with the eligibility checklist for expedited permitting. These criteria can be downloaded at [WEBSITE ADDRESS].

This Guidebook recommends use of a simple checklist to clearly identify eligibility criteria for expedited permitting, where established.

c) A completed Standard Plumbing, Electrical, Structural and Mechanical Plan. The standard plan may be used for proposed solar installations 30 kWth in size or smaller and can be downloaded at [WEBSITE ADDRESS].

A standard plan should be submitted that includes the following.

- *Total number of collectors and area*
- *Make, model and collector certification number*
- *System certification number*
- *Solar storage tank name, model, insulation and capacity*
- *Heat exchanger make and model (if applicable)*
- *Specifications of heat transfer fluid (if applicable)*

d) A roof plan showing roof layout and solar collectors with attachment details.

e) System schematic, including major components.

f) Equipment cut sheets including collectors, controller, storage tank/heat exchanger (if applicable).

g) Completed expedited Structural Criteria checklist along with required documentation. Structural Criteria can be downloaded at [WEBSITE ADDRESS].

For systems that do not meet all the requirements in the structural criteria checklist, provide structural drawings and calculations along with the following information.

- The type of roof covering and the number of roof coverings installed
- Type of roof framing, size of members and spacing
- Weight of panels, support locations and method of attachment
- Framing plan and details for any work necessary to strengthen the existing roof structure
- Site-specific structural calculations
- Where an approved racking system is used, provide documentation showing manufacturer of the rack system, maximum allowable weight the system can support, attachment method to the roof or ground and product evaluation information or structural design for the rack system

This Guidebook recommends that local jurisdictions adopt a prescriptive approach to establishing minimal structural requirements that avoids the need for structural calculations. A simple list of criteria is provided in this Guidebook (SWH Toolkit Document 4). A full explanation of the methods and calculations used to produce these criteria can be found in the Structural Technical Appendix for Residential Rooftop Solar Installations at **http://www.opr.ca.gov/docs/Solar_Structural_Technical_Appendix.pdf**.

3. Plan Review

Permit applications can be submitted to [DEPARTMENT NAME] in person at [ADDRESS] and [IF APPLICABLE] electronically through: [WEBSITE/EMAIL/FAX].

Permit applications utilizing standard plan may be approved "over the counter" at [ADDRESS]. Permit applications may also be submitted electronically for "over the counter" approval [IF APPLICABLE] through: [WEBSITE/EMAIL/FAX].

Permits not approved "over the counter" should be reviewed in [ONE TO THREE] days.

4. Fees

[PROVIDE CLEAR FEE SCHEDULE]

5. Inspections

Once all permits to construct the solar installation have been issued and the system has been installed, it must be inspected before final approval is granted. On-site inspections can be scheduled by contacting [DEPARTMENT] by telephone at [PHONE NUMBER] or electronically at [WEBSITE OR EMAIL ADDRESS]. Inspection requests received within business hours are typically scheduled for the next business day. If next business day is not available, inspection should happen within a five-day window.

Permit holders must be prepared to show conformance with all technical requirements in the field at the time of inspection. The inspector will verify that the installation is in conformance with applicable code requirements and with the approved plans.

The inspection checklist provides an overview of common points of inspection, and the applicant should be prepared to show compliance with these points.

6. Departmental Contact Information

For additional information regarding this permit process, please consult our departmental website at [WEBSITE] or contact [DIVISION NAME] at [PHONE NUMBER].

SWH TOOLKIT DOCUMENT #1B

Your City logo here

Submittal Requirements Bulletin — Solar Pool Heating Installations 30 kWth or Less for One- and Two-Family Dwellings

This information bulletin is published to guide applicants through a streamlined permitting process for solar pool heating (SPH) projects 30 kWth (462 square foot) in size or smaller. This bulletin provides information about submittal requirements for plan review, required fees and inspections.

*Note: Language in **ALL CAPS** below indicates where local jurisdictions should provide information specific to the jurisdiction. Language in italics indicates explanatory notes from the authors of this Guidebook.*

1. Approval Requirements

The following permits are required to install a SPH system with a maximum thermal output of 30 kWth or less:

a) [LIST TYPE OF PERMIT(S) REQUIRED BY THE LOCAL JURISDICTION, i.e., PLUMBING OR BUILDING PERMIT.]

Planning review [IS/IS NOT] required for SPH installations of this size.

2. Submittal Requirements

a) Completed permit application form. This permit application form can be downloaded at [WEBSITE ADDRESS].

b) Demonstrate compliance with the eligibility checklist for expedited permitting. These criteria can be downloaded at [WEBSITE ADDRESS].

This Guidebook recommends use of a simple checklist to clearly identify eligibility criteria for expedited permitting, where established.

c) A completed Standard Plumbing, Electrical and Structural Plan. The standard plan may be used for proposed solar installations 30 kWth in size or smaller and can be downloaded at [WEBSITE ADDRESS].

A standard plan should be submitted that includes the following.

- *Total number of collectors and area*
- *Make, model and collector certification number*
- *Major components*

d) A roof plan showing roof layout and solar collectors with attachment details.

e) Standard one-line plumbing diagram of system showing and labeling major components.

f) Equipment cut sheets including collectors, controller, motorized valve (if applicable).

g) Completed expedited Structural Criteria checklist along with required documentation. Structural Criteria can be downloaded at [WEBSITE ADDRESS].

For systems that do not meet all the requirements in the structural criteria checklist, provide structural drawings and calculations along with the following information.

- The type of roof covering and the number of roof coverings installed
- Type of roof framing, size of members and spacing
- Weight of panels, support locations and method of attachment
- Framing plan and details for any work necessary to strengthen the existing roof structure
- Site-specific structural calculations
- Where a racking system is used, provide documentation showing manufacturer of the rack system, maximum allowable weight the system can support, attachment method to the roof or ground and product evaluation information or structural design for the rack system

This Guidebook recommends that local jurisdictions adopt a prescriptive approach to establishing minimal structural requirements that avoids the need for structural calculations. A simple list of criteria is provided in this Guidebook (SWH Toolkit Document 4). A full explanation of the methods and calculations used to produce these criteria can be found in the Structural Technical Appendix for Residential Rooftop Solar Installations at **http://www.opr.ca.gov/docs/Solar_Structural_Technical_Appendix.pdf**.

3. Plan Review

Permit applications can be submitted to [DEPARTMENT NAME] in person at [ADDRESS] and [IF APPLICABLE] electronically through: [WEBSITE/EMAIL/FAX].

Permit applications utilizing standard plan may be approved "over the counter" at [ADDRESS]. Permit applications may also be submitted electronically for "over the counter" approval [IF APPLICABLE] through: [WEBSITE/EMAIL/FAX].

Permits not approved "over the counter" should be reviewed in [ONE TO THREE] days.

4. Fees

[PROVIDE CLEAR FEE SCHEDULE]

5. Inspections

Once all permits to construct the solar installation have been issued and the system has been installed, it must be inspected before final approval is granted. On-site inspections can be scheduled by contacting [DEPARTMENT] by telephone at [PHONE NUMBER] or electronically at [WEBSITE OR EMAIL ADDRESS]. Inspection requests received within business hours are typically scheduled for the next business day. If next business day is not available, inspection should happen within a five-day window.

Permit holders must be prepared to show conformance with all technical requirements in the field at the time of inspection. The inspector will verify that the installation is in conformance with applicable code requirements and with the approved plans.

The inspection checklist provides an overview of common points of inspection, and the applicant should be prepared to show compliance with these points.

6. Departmental Contact Information

For additional information regarding this permit process, please consult our departmental website at [WEBSITE] or contact [DIVISION NAME] at [PHONE NUMBER].

SWH TOOLKIT DOCUMENT #2A

Your City logo here

Eligibility Checklist for Expedited Solar Domestic Water Heating Permitting for One- and Two-Family Dwellings

GENERAL REQUIREMENTS

A.	System size is 30 kWth (462 square feet of collector) or less	☐ Y	☐ N
B.	The solar array is roof-mounted on one- or two- family dwelling or accessory structure	☐ Y	☐ N
C.	The solar collector arrays will not exceed the maximum legal building height	☐ Y	☐ N
D.	Solar collectors are certified by an accredited listing agency	☐ Y	☐ N
E.	Solar domestic water heating system is certified by an accredited listing agency	☐ Y	☐ N
F.	Permit application is completed and attached	☐ Y	☐ N
G.	System schematic is included	☐ Y	☐ N
H.	List of major components to match system schematic	☐ Y	☐ N
I.	Heat transfer fluid is either water or a nontoxic fluid	☐ Y	☐ N

PLUMBING REQUIREMENTS

A.	Adequate extreme temperature protection is provided	☐ Y	☐ N

STRUCTURAL REQUIREMENTS

A.	A completed Structural Criteria and supporting documentation is attached (as required)	☐ Y	☐ N

Notes:
These criteria are intended for streamlined solar permitting process.
1. If any items are checked NO, revise design to fit within Eligibility Checklist, otherwise permit application may go through standard process.

SWH TOOLKIT DOCUMENT #2B

Your City logo here

Eligibility Checklist for Expedited Solar Pool Heating Permitting for One- and Two-Family Dwellings

GENERAL REQUIREMENTS

A. System size is 30 kWth (462 square feet of collector) or less	☐ Y	☐ N
B. The solar array is roof-mounted on one- or two- family dwelling or accessory structure	☐ Y	☐ N
C. The solar collector arrays will not exceed the maximum legal building height	☐ Y	☐ N
D. Solar collectors are certified by an accredited listing agency	☐ Y	☐ N
E. Building Permit application is completed and attached	☐ Y	☐ N
F. Heat transfer fluid is either water or a nontoxic fluid	☐ Y	☐ N

PLUMBING REQUIREMENTS

A. Adequate extreme temperature protection is provided (if applicable)	☐ Y	☐ N
B. Standard one-line plumbing diagram is provided with components showing solar interface with existing plumbing	☐ Y	☐ N

STRUCTURAL REQUIREMENTS

A. A completed Structural Criteria and supporting documentation is attached (as required)	☐ Y	☐ N

Notes:
These criteria are intended for streamlined solar permitting process.
1. If any items are checked NO, revise design to fit within Eligibility Checklist, otherwise permit application may go through standard process.

SWH TOOLKIT DOCUMENT #3A

Your City logo here

Solar Domestic Water Heating Standard Plan for One- and Two-Family Dwellings

SCOPE: Use this plan ONLY for solar domestic water heating systems not exceeding a thermal output rating of 30 kWth on the roof of a one- or two-family dwelling or accessory structure and used for domestic water heating. Systems must be in compliance with current California Building Standards Code, Title 24 and local amendments of the authority having jurisdiction (AHJ). Other articles of the California Plumbing Code (CPC) or California Mechanical Code (CMC) or other California health and safety codes shall apply.

MANUFACTURER'S SPECIFICATION SHEETS MUST BE PROVIDED for proposed collector, controller, pump, storage tank/heat exchanger/ heat transfer fluid (if applicable) and mounting systems. Equipment intended for use with SWH system shall be identified and listed for the application.

Job Address:_____Permit #: _____

Contractor/Engineer Name:_____License # and Class: _____

Signature:_____Date:_____Phone Number: _____

Email:_____ Total # of Collectors Installed

_____Total Area of Collectors _____

Collector Certification Number (include certifying agency) _____

System Certification Number (include certifying agency) _____

Max Height Above Roof_____Height Above Ground _____

Major Components (for SDWH systems)

Solar Tank Make/Model_____Gallons_____Insulation R-_____Pressurized? _____

Heat Exchanger Make/Model_____Number of Walls Heat Exchange Fluid _____

Solar Control Make/Model _____

Solar Pump/Circulator Make/Model _____

Expansion Tank Make/Model_____Appropriately Sized for Use? _____

Mounting Hardware Make/Model or Type _____

Do all the above data match substantially the data used for certification?_____

Your City logo here

SWH TOOLKIT DOCUMENT #3B

Solar Pool Heating Standard Plan for One- and Two-Family Dwellings

SCOPE: Use this plan ONLY for solar pool heating systems not exceeding a thermal output rating of 30 kWth on the roof of a one- or two-family dwelling or accessory structure and used for residential solar pool heating. Systems must be in compliance with current California Building Standards Code, Title 24 and local amendments of the authority having jurisdiction (AHJ). Other articles of the California Plumbing Code (CPC) or California Mechanical Code (CMC) or other health and safety codes shall apply.

MANUFACTURER'S SPECIFICATION SHEETS MUST BE PROVIDED for proposed collector, controller, solar pump (if applicable), heat exchanger/heat transfer fluid (if applicable), diverting valve (if applicable) and mounting systems. Equipment intended for use with a solar pool heating system shall be identified and listed for the application.

Job Address:_____Permit #: _____

Contractor/Engineer Name:_____License # and Class: _____

Signature:_____Date:_____Phone Number: _____

Email:_____ Total # of Collectors Installed

_____Total Collector Area _____

Collector Certification Number (include certifying agency) _____

Collector Material _____

Max Height Above Roof_____Height Above Ground _____

Major components

Solar Control Make/Model _____

Solar Pump Make/Model (if applicable) _____

Diverting Valve Make/Model _____

Mounting Hardware Make/Model or Type _____

SAMPLE ROOF PLAN for SDWH and SPH systems

-ROOF TYPE: STANDING SEAM

-ROOF HEIGHT (Elevation): MAX 15’ (1 story)

-RAFTERS: 2” X 6” @ 24” OC

(18) 4’x12’ XXX PANELS

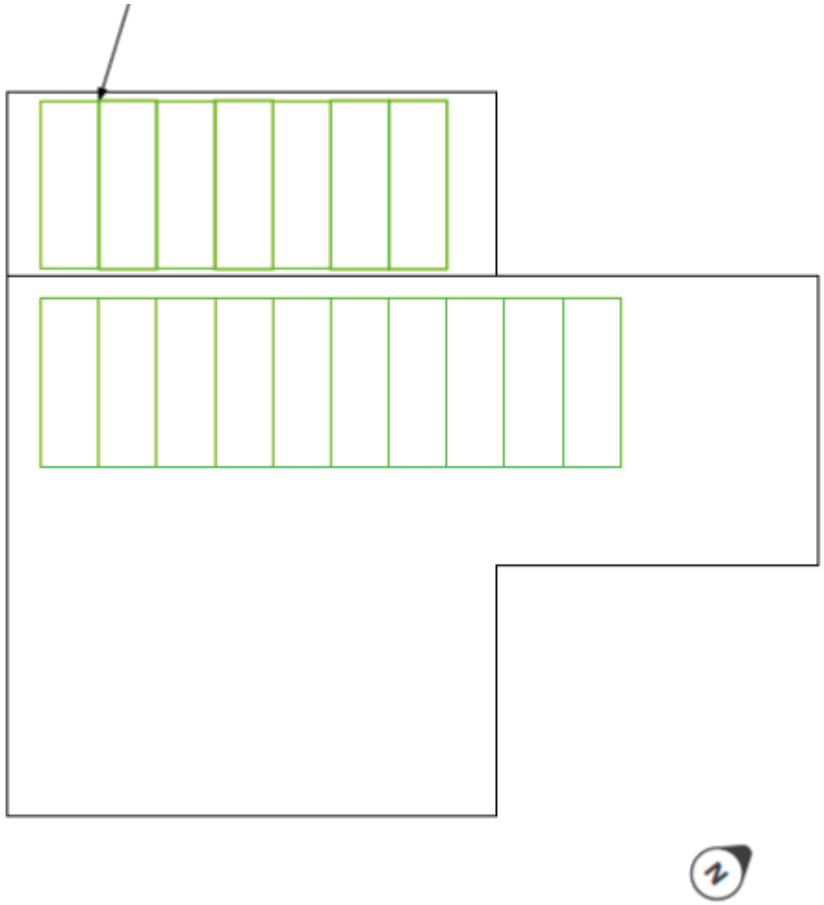

SAMPLE ONE LINE PLUMBING DIAGRAM

For SPH Systems

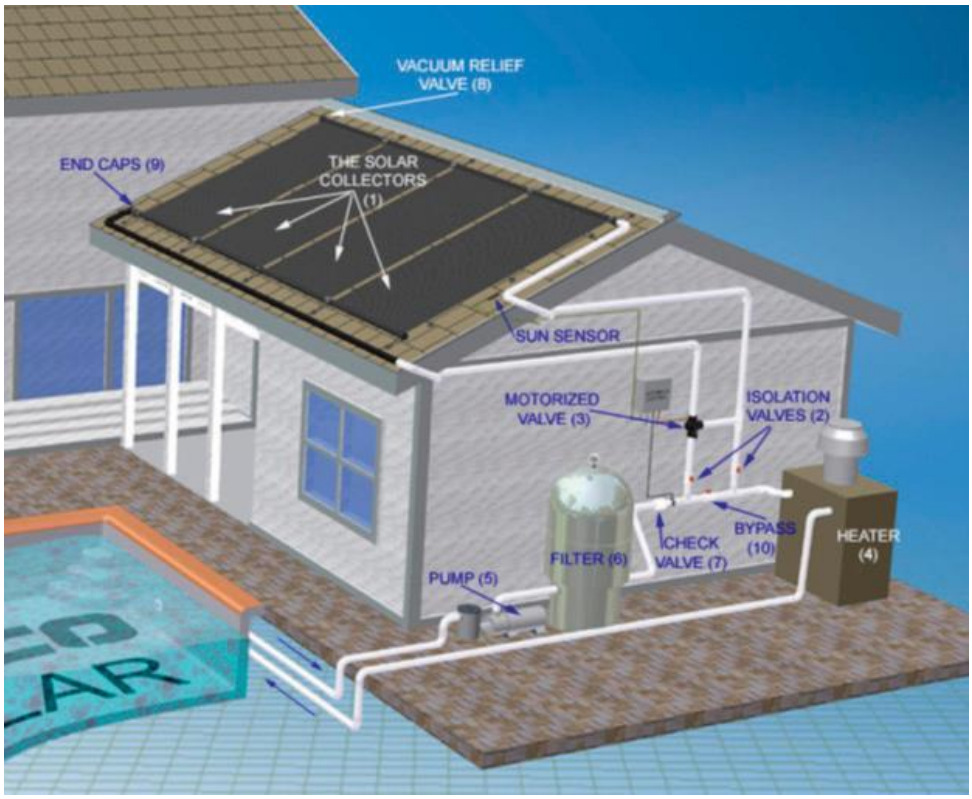

SWH TOOLKIT DOCUMENT #4

Your City logo here

Structural Criteria for Residential Rooftop Solar Energy Installations

Use of this document

This toolkit document includes a one-page list of structural criteria for over-the-counter or online approval, as well as attached tables and figures that supplement the criteria and explain their use.

This document applies to flush-mounted solar arrays installed on the roofs of wood-framed, one- and two-family dwellings. "Flush-mounted" means the modules are installed parallel to, and relatively close to, the roof surface (see the "Solar Array Check" section of the Structural Criteria for specific qualifying requirements). This list is intended to be a simple pre-installation check to gain reasonable assurance that the design of the solar array complies with the structural provisions of the 2016 California Building Code (CBC) and 2016 California Residential Code (CRC). It is not intended to provide post-installation inspection criteria.

Currently Used Expedited Solar Permitting Approaches

This document is intended for jurisdictions without an expedited process for residential solar structural permitting and is not intended to replace or supplant procedures for jurisdictions with an expedited process already in place. Good examples from jurisdictions with provisions for expedited structural permitting include the City of Los Angeles, which exempts residential solar installations from structural permitting if five simple requirements are met, and the East Bay Green Corridor's streamlined solar permitting process, which uses structural criteria tailored to typical conditions for their consortium of nine cities.

Regional and Site Assumptions

This document is based on the following regional and site assumptions.

- The dwelling is located in a ZERO snow load area (see Map 1).
- The dwelling is not in Wind Exposure D (within 200 yards of the ocean or a large coastal bay).
- If in Wind Exposure B (urban, suburban or wooded areas), the dwelling may be located:
  - in a Special Wind Region (see Map 2) with design wind speeds between 110 and 130 mph
    - on a tall hill, provided average slope is no steeper than 15%
- If in Wind Exposure C (within 500 yards of large open fields or grasslands), the dwelling is:
- in a standard 110 mph design wind speed region
- not on a hill with a grade steeper than 5%.

Additional Options

The chief building official (CBO) may consider adding rows to the structural criteria, based on personal judgment and their jurisdiction's conditions and history. Possible additional questions include the following.

(Introductory text provided for jurisdiction's reference only. Do not attach to Criteria that follow.)

- Regional and Site Checks
  - If the jurisdiction is in a mixed snow load area, with zero snow load only at lower elevations, consider asking, "Is the dwelling lower than elevation_feet?"
  - If the jurisdiction is in a coastal region, consider asking, "Is the dwelling farther than 200 yards from the ocean or a large coastal bay?" to verify the dwelling is not in Wind Exposure D.
  - If the jurisdiction is in a Special Wind Region with design wind speeds between 115 and 130 mph, consider verifying that the dwelling is in Wind Exposure B by asking, "Is the dwelling in an urban, suburban or wooded area and not within 500 yards of open fields and grasslands?"
  - If the jurisdiction is in a Special Wind Region with design wind speeds between 115 and 130 mph, consider verifying that there are no significant topographic wind speed-up effects by asking, "Is the dwelling in a relatively flat area (grade less than 5%) and not within 500 yards of the crest of a tall hill?"

- Roof Check
  - Based on the jurisdiction's one- and two-family housing stock and code compliance history, many CBOs will find it reasonable to assume that most dwellings' roof structures were designed to the building code in effect at the time the houses were built. If so, the roof structure code compliance check consists of the contractor's visual roof audit, checking for unusual sagging or deterioration, without requiring additional measurements of existing rafters to check against span tables.
  - For CBOs of jurisdictions with evidence of structurally deficient one- and two-family housing stock or poor structural code compliance history, the CBO may elect to add the rafter span check option described in the criteria.

The Structural Toolkit and CRC Wind Speeds

The 2013 CRC contained an inconsistency related to wind speeds. Despite referencing ASCE 7-10 as its standard, the 2013 CRC's text and tables use outdated ASCE 7-05 wind speeds. Under the old ASCE 7-05/CBC 2010, the basic design wind speed in most regions of the state was 85 mph (max. 3 second gust in 50 years).
Under ASCE 7-10/CBC 2016, the design wind speed has increased to 110 mph (max. 3 second gust in 700 years). Despite the different definitions of wind speed, design wind pressures remain essentially unchanged.

Because the toolkit's structural document is intended to be forward looking, all wind speeds in the toolkit document are based on the ASCE 7-10. This is clearly stated in the caption to the state wind speed map and in Table 1 footnotes. This anticipates an obvious and expected correction to the CRC; otherwise the toolkit would become immediately outdated when the CRC is amended to change the base design wind speed from 85 mph to 110 mph.

2013 CRC text (ASCE 7-05) wind speeds equivalent to the 2016 CRC and CBC Reference Standard (ASCE 7-10) are shown below. See ASCE 7-10 Table C26.5-6 for additional information.

2013 CRC text Standard ASCE 7-05	2016 CRC and CBC Referenced ASCE 7-10
85 mph	110 mph
90 mph	115 mph
95 mph	120 mph
100 mph	126 mph
105 mph	133 mph

(Introductory text provided for jurisdiction's reference only. Do not attach to Criteria that follow.)

Structural Technical Appendix

This toolkit document is supported by a Structural Technical Appendix that describes the technical analysis behind these criteria, which are based on structural engineering principles and the California Building and Residential Codes. The Technical Appendix also provides some additional guidance to address nonconforming items, such as when an anchor layout is not based on a solar support component manufacturer's guidelines or when a coastal site is located within 200 yards of the ocean (Exposure D). **http://www.opr.ca.gov/docs/Solar_Structural_Technical_Appendix.pdf**.

Probability of Code Compliance

The Structural Technical Appendix includes a section that examines the probabilities associated with the assumptions behind Table 1 that allows six-foot cross-slope anchor spacing in some circumstances. That statistical analysis estimates that the probability of code noncompliance for six-foot anchor spacing is only 2 in 1,000 installations (0.2%). Note that probability of structural failure is orders of magnitude lower than the probability of code noncompliance.

(Introductory text provided for jurisdiction's reference only. Do not attach to Criteria that follow.)

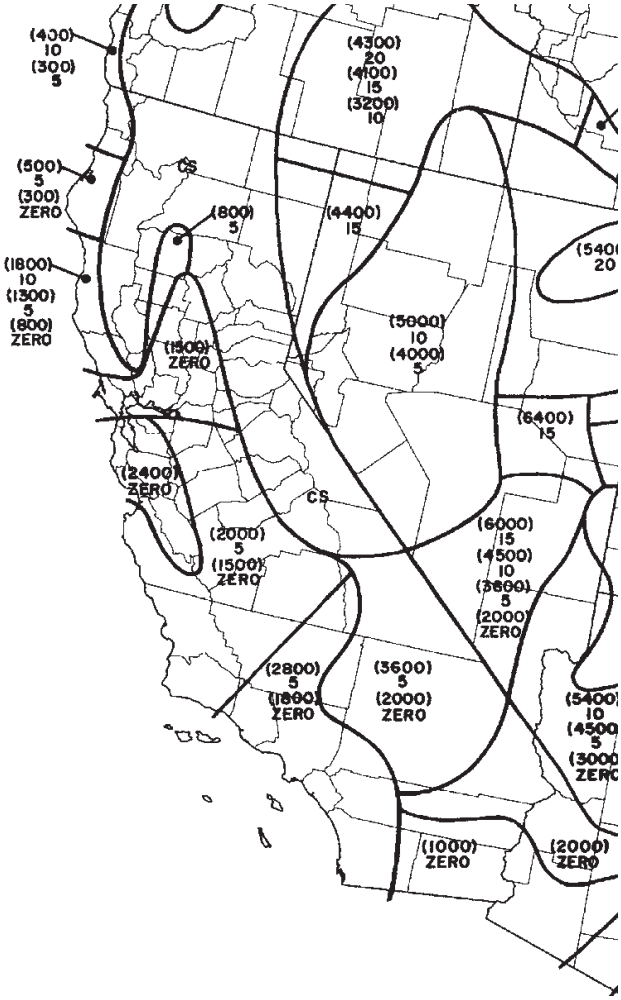

Map 1. California Ground Snow Load Map (Ref: ASCE 7-10).
The numbers in parentheses represent the upper elevation limits in feet for the ground snow load in psf listed below the elevation. Example: (2400) ZERO in the South San Francisco Bay Area indicates that zero ground snow loads occur from sea level up to an elevation of 2,400 feet. CS indicates "Case Studies" where extreme local variations in ground snow loads occur. Non-zero snow load areas and CS areas are excluded from the use of this structural toolkit document. See the Technical Appendix for additional information.

(Map provided for jurisdiction's reference only. Do not attach to Criteria that follow.)

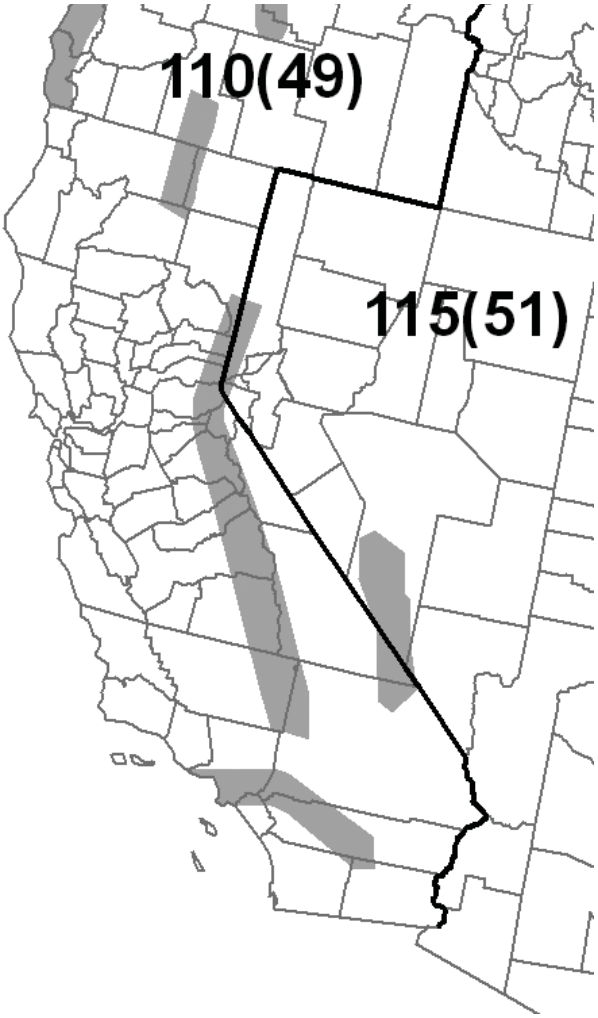

Map 2. California Design Wind Speed Map (Ref: ASCE 7-10).

The number outside the parentheses represents the design wind speed in mph. Typical design wind speed is 110 mph. The gray shaded areas on the map indicate "Special Wind Regions" where higher wind speeds may apply. When the project is in a gray shaded area, contact the local building department for the design wind speed.

(Map provided for jurisdiction's reference only. Do not attach to Criteria that follow.)

STRUCTURAL CRITERIA FOR RESIDENTIAL FLUSH-MOUNTED SOLAR ARRAYS

1. ROOF CHECKS

A. Visual Review/Contractor's Site Audit of Existing Conditions:
- 1) Is the roof a single roof without a reroof overlay? ☐ Y ☐ N
- 2) Does the roof structure appear structurally sound, without signs of alterations or significant structural deterioration or sagging, as illustrated in Figure 1? ☐ Y ☐ N

B. Roof Structure Data:
- 1) Measured roof slope (e.g. 6:12): _____:12
- 2) Measured rafter spacing (center-to-center): _____inch
- 3) Type of roof framing (rafter or manufactured truss): ☐ Rafter ☐ Truss

2. SOLAR ARRAY CHECKS

A. Flush-mounted Solar Array:
- 1) Is the plane of the modules (panels) parallel to the plane of the roof? ☐ Y ☐ N
- 2) Is there a 2" to 10" gap between underside of module and the roof surface? ☐ Y ☐ N
- 3) Modules do not overhang any roof edges (ridges, hips, gable ends, eaves)? ☐ Y ☐ N

B. Do the modules plus support components weigh no more than: 4 psf for photovoltaic arrays or 5 psf for solar thermal arrays? ☐ Y ☐ N

C. Does the array cover no more than half of the total roof area (all roof planes)? ☐ Y ☐ N

D. Are solar support component manufacturer's project-specific completed worksheets, tables with relevant cells circled, or web-based calculator results attached? ☐ Y ☐ N

E. Is a roof plan of the module and anchor layout attached? (see Figure 2) ☐ Y ☐ N

F. Downward Load Check (Anchor Layout Check):
- 1) Proposed anchor horizontal spacing (see Figure 2): ____' - ____"ft-in
- 2) Horizontal anchor spacing per Table 1: ____' - ____"ft-in
- 3) Is proposed anchor horizontal spacing equal to or less than Table 1 spacing? ☐ Y ☐ N

G. Wind Uplift Check (Anchor Fastener Check):
- 1) Anchor fastener data (see Figure 3):
  - a. Diameter of lag screw, hanger bolt or self-drilling screw: _____inch
  - b. Embedment depth of rafter: _____inch
  - c. Number of screws per anchor (typically one): _____
  - d. Are 5/16" diameter lag screws with 2.5" embedment into the rafter used, OR does the anchor fastener meet the manufacturer's guidelines? ☐ Y ☐ N

3. SUMMARY

☐ A. All items above are checked YES. No additional calculations are required.
☐ B. One or more items are checked NO. Attach project-specific drawings and calculations stamped and signed by a California-licensed civil or structural engineer.

Job Address: _____ Permit #: _____
Contractor/Installer: _____ License # & Class: _____
Signature:_____Date: _____ Phone #: _____

Optional Additional Rafter Span Check Criteria

[At option of CBO, insert rows (4) to (7) below into table above after row 1.B.(3)]

1. ROOF CHECKS

B. Roof Structure Data:
- 4) Measured rafter size (e.g. 13/4 x 33/4, not 2x4): ____ x ____ inch
- 5) Measured rafter horizontal span (see Figure 4): ____' - ____"ft-in
- 6) Horizontal rafter span per Table 2: ____' - ____"ft-in
- 7) Is measured horizontal rafter span less than Table 2 span? ☐ Y ☐ N ☐ Truss

(Jurisdictions may delete "Optional Additional Rafter Span Check" at bottom of this page, or incorporate into main list of Structural Criteria above.)

Table 1. Maximum Horizontal Anchor Spacing				
Roof Slope		Rafter Spacing		
		16” o.c.	24” o.c.	32” o.c.
Photovoltaic Arrays (4 psf max)				
Flat to 6:12	0° to 26°	5’-4”	6’-0”	5’-4”
7:12 to 12:12	27° to 45°	1’-4”	2’-0”	2’-8”
13:12 to 24:12	46° to 63°	1’-4”	2’-0”	2’-8”
Solar Thermal Arrays (5 psf max)				
Flat to 6:12	0° to 26°	4’-0”	4’-0”	5’-4”
7:12 to 12:12	27° to 45°	1’-4”	2’-0”	2’-8”
13:12 to 24:12	46° to 63°	Calc. Req’d	Calc. Req’d	Calc. Req’d

Solar support component manufacturer’s guidelines may be relied upon to ensure the array above the roof is properly designed, but manufacturer’s guidelines typically do NOT check to ensure that the roof itself can support the concentrated loads from the solar array. Table 1 assumes that the roof complied with the building code in effect at the time of construction, and places limits on anchor horizontal spacing to ensure that a roof structure is not overloaded under either downward loads or wind uplift loads. Note 4 below lists the basic assumptions upon which this table is based.

Table 1 Notes:

1. Anchors are also known as “stand-offs,” “feet,” “mounts” or “points of attachment.” Horizontal anchor spacing is also known as “cross-slope” or “east-west” anchor spacing (see Figure 2).
2. If anchors are staggered from row-to-row going up the roof, the anchor spacing may be twice that shown above, but no greater than 6’-0”.
3. For manufactured plated wood trusses at slopes of flat to 6:12, the horizontal anchor spacing shall not exceed 4’-0” and anchors in adjacent rows shall be staggered.
4. This table is based on the following assumptions:
    - The roof structure conformed to building code requirements at the time it was built.
    - The attached list of criteria is met.
    - Mean roof height is not greater than 40 feet.
    - Roof sheathing is at least 7/16” thick oriented strand board or plywood. 1x skip sheathing is acceptable.
    - If the dwelling is in Wind Exposure B (typical urban, suburban or wooded areas farther than 500 yards from large open fields), no more than one of the following conditions apply:
        - The dwelling is located in a Special Wind Region with design wind speed between 115 and 130 mph per ASCE 7-10.
        - The dwelling is located on the top half of a tall hill, provided average slope is less than 15%.
    - If the dwelling is in Wind Exposure C (within 500 yards of large open fields or grasslands), all of the following conditions apply.
        - Design wind speed is 110 mph or less (not in a Special Wind Region).
        - The dwelling is not located on the top half of a tall hill.
    - The solar array displaces roof live loads (temporary construction loads) that the roof was originally designed to carry.
    - The Structural Technical Appendix provides additional information about analysis assumptions.

Table 2. Roof Rafter Maximum Horizontal Span (feet - inches)1								
Assumed Vintage	Nominal Size	Actual Size	Non-Tile Roof[2]			Tile Roof[3]		
			Rafter Spacing					
			16” o.c.	24” o.c.	32” o.c.	16” o.c.	24” o.c.	32” o.c.
Post-1960	2x4	1½”x3½”	9’-10”	8’-0”	6’-6”	8’-6”	6’-11”	5’-6”
	2x6	1½”x5½”	14’-4”	11’-9”	9’-6”	12’-5”	10’-2”	8’-0”
	2x8	1½”x7¼”	18’-2”	14’-10”	12’-0”	15’-9”	12’-10”	10’-3”
Pre-1960	2x4	1¾”x3¾”	11’-3”	9’-9”	7’-9”	10’-3”	8’-6”	6’-9”
	2x6	1¾”x5¾”	17’-0”	14’-0”	11’-3”	14’-9”	12’-0”	9’-9”
	2x8	1¾”x7¾”	22’-3”	18’-0”	14’-6”	19’-0”	15’-6”	12’-6”

Beyond a visual review by the contractor checking for unusual sagging or deterioration, some CBOs may want additional assurance that the roof structure complies with structural building code requirements. Table 2 is an optional table some CBOs may elect to use to provide additional assurance by requiring a check of existing roof rafter spans, and supports optional criteria 1.B.5 and 1.B.6. For post-1960 construction, these span tables match the rafter span tables found in the 2016 California Building and Residential codes. For pre-1960 construction, the rafter span tables are based on structural calculations with lumber sizes and wood species and grade appropriate for older construction. Note 5 below lists the basic assumptions upon which this table is based.

Table 2 Notes:

1. See Figure 4 for definition of roof rafter maximum horizontal span.
2. “Non-tile Roof” = asphalt shingle, wood shingle and wood shake, with an assumed roof assembly weight of 10 psf.
3. “Tile Roof” = clay tile or cement tile, with an assumed roof assembly weight of 20 psf
4. Unaltered manufactured plated-wood trusses may be assumed to be code compliant and meet intent of Table 2.
5. This table is based on the following assumptions:
    - Span/deflection ratio is equal to or greater than 180.
    - For post-1960 construction, wood species and grade is Douglas Fir-Larch No. 2.
    - For pre-1960 construction, wood species and grade is Douglas Fir-Larch No. 1.
    - Other wood species and/or grade are also acceptable if allowable bending stress is equal or greater to that listed.

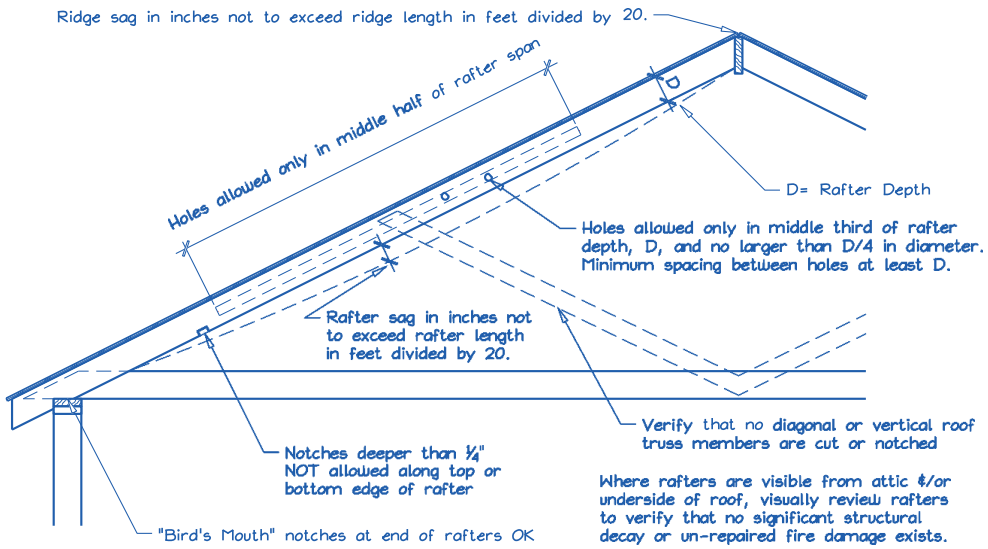

Figure 1. Roof Visual Structural Review (Contractor's Site Audit) of Existing Conditions.

The site auditor should verify the following.

1. No visually apparent disallowed rafter holes, notches and truss modifications as shown above.
2. No visually apparent structural decay or unrepaired fire damage.
3. Roof sag, measured in inches, is not more than the rafter or ridge beam length in feet divided by 20.

Rafters that fail the above criteria should not be used to support solar arrays unless they are first strengthened.

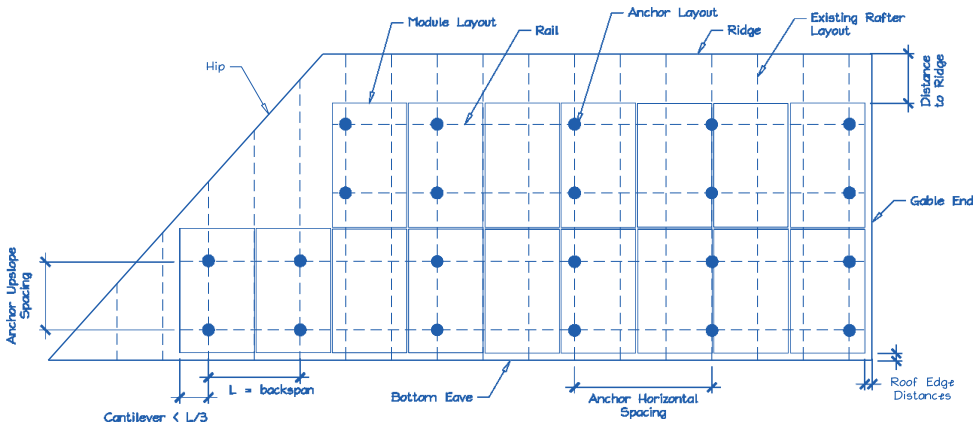

Figure 2. Sample Solar Panel Array and Anchor Layout Diagram (Roof Plan).

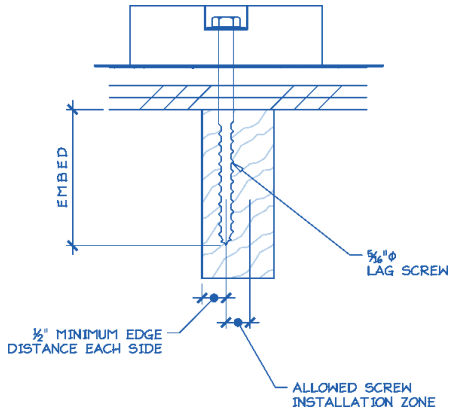

Figure 3. Typical Anchor with Lag Screw Attachment.

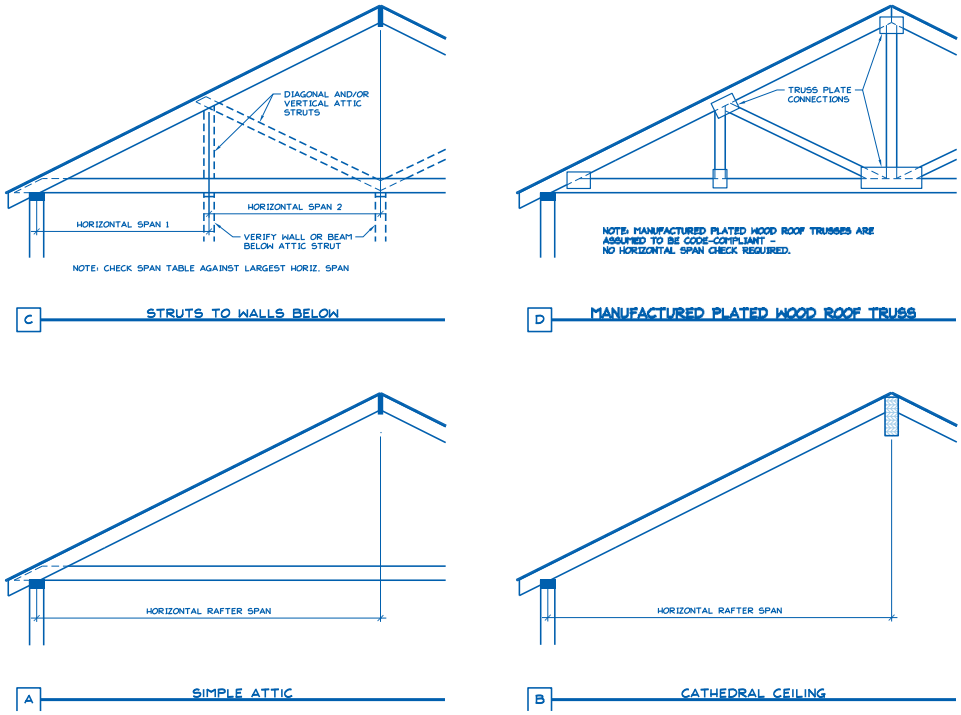

Figure 4. Definition of Rafter Horizontal Span.

(Attach Figure 4 ONLY if the Optional Additional Rafter Span Check is added to the list of Structural Criteria.)

SWH TOOLKIT DOCUMENT #5A

Your City logo here

Inspection Guide for SDWH Systems in One- and Two-Family Dwellings

This document is a field inspection guide for SDWH systems. These inspection references detail most of the issues that relate to SDWH systems during the inspection process.

All California Electrical Code (CEC), California Residential Code (CRC), California Building Code (CBC), California Mechanical Code (CMC) and California Plumbing Code (CPC) references are to the 2016 versions unless otherwise noted.

SOLAR DOMESTIC WATER HEATING SYSTEM ELIGIBILITY			
SYSTEM	Criteria		Yes
	1. Major components installed match those of certified system?		
SOLAR DOMESTIC WATER HEATING INSPECTION GUIDE			
	Guideline	Source of Guideline	Yes
ROOF	I. Roof penetrations/attachments are properly flashed	CBC Chap. 15, CRC Chap. 9	
SOLAR LOOP PIPING	I. Piping must be properly supported, hung and anchored per code	CPC 313.1	
	II. Solar piping properly insulated	See local ordinance.	
	III. Dissimilar materials isolated, as required	CPC 310.6	
	IV. Penetrations through structural members as per code	CPC 312.2	
	V. Penetrations through fire-resistant assemblies installed per code	CPC 1405.2	
	VI. System has adequate freeze protection	CPC 312.6	
	VII. System overheat protection	CPC 505.2	
	VIII. Expansion tank sized correctly (indirect system) according to need for operation or overheat protection?	CMC 1004.3, 1004.4	
	IX. Pressure relief/temperature relief valve(s) installed per design (if applicable)	CPC 608.4 & 608.5	
	X. Piping labels show type of fluid and direction of flow	CPC 601.2	
	XI. Drain and fill valves capped and labeled	CPC 601.2	
STORAGE TANK	I. Tank labeled with pressure rating for pressurized storage	CPC 505.4	
	II. Relief drain installed properly for pressurized storage	CPC 504.6, CMC 1005.1	
	III. Heat exchanger must protect potable water system from being contaminated by the heat transfer medium	CPC 603.5.4	
	IV. Tank installed in garage meets code requirements	CPC 507.13	
	V. Pan installed under tank (as required)	CPC 507.5	
	VI. Tank installed on level surface	CPC 508.4.3	
	VII. Tank supported for seismic loads	CPC 507.2	
	VIII. All valves, fittings and solders are rated for potable systems and meeting CA lead law requirements	CPC 604.1	
	IX. Unions installed within 12” of tank connections for all piping to and from tank and heat exchangers	CPC 609.5	

POTABLE PIPING	I. All valves, fittings and solders are rated for potable systems and meeting CA lead law requirements	CPC 604.1	
	II. Potable water piping properly labeled	CPC 601.3	
	III. Any connection to PEX is more than 18" from tank fittings	CPC 604.13	
	IV. Hot water service piping insulated properly	See local ordinance.	
	V. Vacuum relief valve properly installed (if required)	CPC 603.5.4, 608.7	
CONTROLS	I. Control and pump disconnect(s) properly installed	CEC 430 (IX), 690.17	
	II. Conductors between control and power source properly installed	CEC 430 (II)	
	III. Conductors between control and pump properly installed	CEC 430 (II), 690 (IV)	
	IV. Solar collector sensors protected from sun and weather	CEC 310.8 10, D(1), D(2)	
	V. Control relay rated higher than load for each output	CEC 430.83	

Your City logo here

SWH TOOLKIT DOCUMENT #5B

Inspection Guide for Solar Pool Heating Systems in One- and Two-Family Dwellings

This document is a field inspection guide for SPH systems. These inspection references detail most of the issues that relate to SPH systems during the inspection process.

All California Electrical Code (CEC), California Residential Code (CRC), California Building Code (CBC), California Mechanical Code (CMC), and California Plumbing Code (CPC) references are to the 2016 versions unless otherwise noted.

SOLAR POOL HEATING SYSTEM ELIGIBILITY			
SYSTEM	Criteria		Yes
	1. Major components installed match those of certified system?		
SOLAR POOL HEATING INSPECTION GUIDE			
	Guideline	Source of Guideline	Yes
ROOF	I. Roof penetrations/attachments are properly flashed	CBC Chap. 15, CRC Chap. 9	
SOLAR LOOP PIPING	I. Piping properly supported	CPC 313.1	
	II. Vacuum relief valve installed (if required by manufacturer)	See local ordinance.	
	III. Drain valves installed if the system is not self-draining	CPC 312.6	
	IV. Penetrations through structural members as per code	CPC 312.2	
	V. Penetrations through fire-resistant assemblies installed per code	CPC 1405.2	
	VI. System has adequate freeze protection	CPC 312.6	
CONTROLS	I. Control and pump properly installed and bolted to pad	CEC 430 (IX), 690.17	
	II. Conductors between control and power source properly installed	CEC 430 (II)	
	III. Conductors between control and pump properly installed	CEC 430 (II), 690 (IV)	
	IV. Solar collector sensors protected from sun and weather	CEC 310.10, D(1), D(2)	
	V. Control relay rated higher than load for each output	CEC 430.83	

Part 5

RESOURCES AND INFORMATION

Understanding the Code

Code Requirements for Solar Photovoltaic (PV) Systems for One and Two-Family Dwellings

Based on the 2016 California Building Code (CBC), the 2016 California Residential Code (CRC) and the California Energy Code (CEC)

PURPOSE

The purpose of this information bulletin is to clarify requirements of the State Building Standards Codes (Title 24) that pertain to solar PV installations on one- and two-family dwellings. This bulletin can serve as a reference guide for permit applicants and enforcing agencies to clarify how state code requirements are practically applied in the local jurisdiction. It is intended to minimize permitting uncertainty and differing interpretation regarding specific code requirements for solar PV installations. This information bulletin primarily clarifies requirements pertaining to the California Building Code and the California Residential Code, since these codes in their current form require significant local interpretation. This information bulletin does not address local regulations.

The implementation of uniform standards to achieve the timely and cost-effective installation is consistent with the California Solar Rights Act that views solar installation as a matter of statewide concern and prohibits local jurisdictions from adopting unreasonable barriers to the installation of solar energy systems (CA Government Code Section 65850.5).

PART I: BUILDING AND RESIDENTIAL CODE REQUIREMENTS

1. Definitions

1.1 Solar photovoltaic system: The total components and subsystems that, in combination, convert solar energy into electric energy suitable for connection to utilization load (CEC Article 100 and Article 690.2)

1.2 Module: A complete, environmentally protected unit consisting of solar cells, optics and other components, exclusive of tracker, designed to generate DC power when exposed to sunlight (CEC Article 690.2)

1.3 Panel: A collection of modules mechanically fastened together, wired and designed to provide a field- installable unit (CEC Article 690.2)

1.4 Building integrated photovoltaics (BIPV): Photovoltaic cells, devices, modules or modular materials that are integrated into the outer surface or structure of a building and serve as the outer protective surface of the building (CEC Article 690.2)

1.5 Alternating-current (AC) module (alternating-current photovoltaic module): A complete, environmentally protected unit consisting of solar cells, optics, inverter and other components, exclusive of tracker, designed to generate AC power when exposed to sunlight (CEC Article 690.2)

1.6 Photovoltaic modules/shingles: A roof covering composed of flat-plate photovoltaic modules fabricated into shingles. (CRC Chapter 2, Section 202)

2. Solar Ready Requirements

The California Energy Code (Section 110.10) contains mandatory requirements for solar readiness in certain newly constructed single-family and multifamily residences. Although these requirements apply to new construction only, these requirements are briefly outlined for informational purposes.

2.1 Solar Zone: Newly constructed homes are required to have an area on the roof or overhang available for future solar installations that meets certain requirements:

2.1.1 Minimum area: The solar zone must be a minimum of 250 square feet, subject to certain exceptions outlined in the code (Section 110.10.b.1.[b]).

2.1.2 Orientation: All sections of the solar zone located on steep-sloped roofs (defined as a roof whose pitch is greater than 2:12) shall be oriented between 110 degrees and 270 degrees of true north.

2.1.3 Shading: The solar zone must be free of obstructions and may not be shaded by certain obstructions outside the zone (Section 110.10.b.3).

2.2 Documentation: Construction documentation must clearly show the dead and live load for the solar zone. Collateral loads for future solar energy systems do not need to be shown on the construction documents. (Section 110.10[b][4])

Construction documentation must also show pathways for electrical or plumbing interconnections. This includes a location for inverters and metering equipment and a pathway for routing of conduit from the solar zone to the point of interconnection with the electrical service. For single-family residences, the point of interconnection will be the main service panel. (Section 110.10[c])

This information must also be provided to the occupant. (Section 110.10[d])

2.3 Main Electrical Service Panel: The main electrical service panel shall have a minimum bus bar rating of 200 amps and a marked reserved space for future solar electric installation. (Section 110.10[e])

3. Structural Requirements

3.1 PV systems positively anchored to the building

3.1.1 Exemption from structural calculations: The building official may waive the requirement for structural calculations for solar PV installations on top of existing roofs if the official can readily determine that the additional weight of the new solar PV system on the roof does not affect the structural integrity of the building. Some jurisdictions may choose to use the provided Structural Criteria for Flush-Mounted PV and SWH Systems as a prescriptive approach for when structural calculations can be waived, however, that varies by the enforcing agency.

3.1.2 Structural calculations for non-prequalified systems: When structural calculations are required, calculations shall demonstrate that the primary structure will support the additional vertical and lateral loads from the panels and related equipment.

Note 1: See the Appendix for additional guidance on structural calculations.

3.1.2.1 Roof dead load: The weight of solar PV systems shall be considered as dead load in the design of the structure (CBC Section 1606, CRC Section R301.4).

For installation of conventional (not BIPV) solar PV panels on existing roofs, roof live load is not imposed where PV panels occur, provided the clear distance under the panels to top of the roof is less than 42” and provided the roof design is adequate for the concentrated loads from the solar PV panel support frames. See Structural Engineers Association of California (SEAOC) Solar PV-3 Live Load document for additional information.

When the roof live load is allowed to be reduced, consideration should be given to the possibility that a roof may have more than one layer of existing roofing. For pre-1960 wood-framed construction, structural calculations may be based on actual (field- measured) lumber sizes (typically greater than modern lumber sizes), and Douglas fir Grade 1 may be assumed unless field conditions indicate otherwise.

3.1.2.2 Roof live load: Roof live load is not considered in areas covered by roof-mounted panels where there is less than 42" clear under the panels. Roof surfaces not covered by solar PV panels shall be designed for the roof live load (CBC Section 1607, CRC R301.6).

The building official may determine that live load need not be considered for solar PV panels and associated supporting members that are built on grade. Such interpretation is generally based on the assumption that the solar PV panels will not be stepped on or used by anyone to support any live load.

3.1.2.3 Wind design: Calculations shall demonstrate that the solar PV panels and associated supporting members are designed to resist wind loads. For ballasted PV systems, see Section 2.2 of this information bulletin (CBC Section 1609, CRC R301.2.1).

Photovoltaic modules/shingle packaging shall bear a label to indicate compliance with the procedures in ASTM D 3161 and the required classification from CRC Table R905.2.4.1(2) Classification of Asphalt Shingles Per ASTM D 3161 (CRC Section R905.16.3).

For ballasted PV systems, see Code Requirements for Solar Photovoltaic (PV) Systems – General, Section 2.2 of this information.

3.1.2.4 Seismic design: Calculations shall demonstrate that the solar PV panels and associated supporting members are designed to resist earthquake loads.

3.1.2.5 For wood construction, supports shall be attached with fasteners of sufficient length and size to achieve minimum required embedment into solid wood taking into consideration the plywood and multiple layers of roofing that may exist, unless otherwise approved by the enforcing agency (CRC Section R301.1.3).

3.1.2.6 Snow load: When applicable, include snow loads and loads from snowdrift (CBC Section 1608, CRC R301.2.3).

3.1.2.7 Requirements for load combinations: The applicable load combinations in CBC 1605 may be applied to all loading conditions, including evaluating the effects of dead load to counteract wind uplift.

3.1.2.8 The Division of the State Architect (DSA) Interpretation of Regulations Article 16.8, intended for public schools, provides useful code interpretation guidance to non- DSA code officials regarding several types of solar systems, both ground- and roof- mounted.

3.2 Structural strength of PV panels: The structural strength of solar PV panels is not addressed in the code.

UL 1703, Third Edition, published March 15, 2002, requires that solar PV panels be tested to withstand a superimposed load of 30 PSF. Therefore, all solar PV panels that are listed per UL 1703 are considered to meet this requirement.

When used as a building component and depending on the load values that the solar PV panels are subjected to, the enforcing agency may require a test report from an agency recognized by the enforcing agency showing the strength of the solar PV panels.

3.3 Condition of existing roof: Solar PV systems shall not be installed on an existing roof that is deteriorated to the point where it is not adequate as a base (this interpretation is based on CRC R907).

3.4 Premanufactured support systems: Premanufactured support systems must support the PV system and allow the system to stay attached to the structure when exposed to wind, snow or seismic load.
Compliance of the PV support system with appropriate building codes is accomplished through a design specified by a licensed engineer or architect or through research reports from approved sources as addressed in CBC Section 1703.4.2. Solar support component manufacturers often provide structural engineering design guidelines, worksheets, code compliance reports and Internet website calculators. The manufacturer's engineering guidelines are intended to ensure that the PV system above the roof and its connection to the roof assembly are code compliant. Additional requirements may be imposed by the enforcing agency (CRC Section R301.1.3).

4. Fire Safety Provisions

4.1 Fire/roof classification of photovoltaic (PV) panels

4.1.1 Solar PV panels installed on top of a building's roof structure

4.1.1.1 Solar PV systems installed on top of a roof where the space between the solar PV panels and the roof has no use and no potential use are generally considered equipment. These solar PV panels/models shall comply with the minimum fire/roof classification requirements or roof covering as required by the current CRC Section R902.4

For installations in State Responsibility Areas (SRA) or High Fire Hazard Severity Zones, additional provisions adopted by the local enforcing agency may be applicable. Check with the enforcing agency for any additional requirements.

4.1.1.2 Solar PV panels used as roofing on an independent (stand-alone) structure: Solar PV panels/modules that are designed to be on the roof and span to structural supports, and have a use or occupancy underneath, shall comply with the minimum fire/roof classification requirements for roof covering as required by CRC Section R902.4. An example of this type of installation is a carport structure having solar PV panels as the roof.

4.1.1.3 Solar PV panels installed as a part of a building's roof structure: Solar PV panels installed as integrated roofing material shall comply with the minimum fire/roof classification requirements for roof covering as required by the current CRC Section R902. An example of this type of installation is PV modules integrated into the roofing shingles (BIPV systems).

4.1.2 Solar PV systems installed on grade: Solar PV panels that are part of a stand-alone, ground-mounted solar PV panel structure, with no use and no potential use underneath are generally considered equipment and therefore the fire/roof classification requirements would not apply. The solar PV panels will require a clear, brush-free area of 10 feet around the installation (based on the definition of a roof assembly in CRC Section R202 and R324).

4.2 Area, height and story limitations: Where there is a use between the solar PV panels and the roof/ grade underneath, adding such solar PV structures may constitute additional floor area, story and/ or height. Solar PV panels supported by framing that has sufficient uniformly distributed and

unobstructed openings throughout the top of the array (horizontal plane) to allow heat and gases to escape, as determined by the enforcing agency, are generally considered equipment.

4.3 **Location from property line and adjacent buildings:** Solar PV panels and associated framing, with no use and no potential use between the panels and the grade underneath, are generally treated as equipment. When not considered equipment, they may be considered a structure and shall be located and protected based upon the code required fire separation distance to property lines and adjacent buildings. (CRC Section R302.1)

4.4 **Roof Access and Pathways:** The installation of solar PV systems must allow for fire department smoke ventilation operations. Roof access point, clear access pathways, solar PV systems spacing and layout must comply with the requirements outlined in CRC Section R324.

4.5 **Markings:** The solar PV systems must be marked or labeled in accordance with CRC Section R324 and CEC Article 690. Markings are to be placed every 10 feet and in other areas as required.

4.6 **Other fire safety requirements or guidelines:** The installation of solar PV systems may be subject to additional provisions adopted by the local enforcing agency. Check with the enforcing agency for additional requirements.

5. **Roof drainage:** Roof-mounted solar PV systems shall not cause excessive sagging of the roof that results in water ponding. They shall also not block or impede drainage flows to roof drains and scuppers. (CRC Section R903.4; CPC Section 1101.12 also applies)

6. **Roof penetrations:** All roof penetrations shall be sealed using approved methods and products to prevent water leakage. Such methods include but not limited to caulking, roof jacks and sheet metal flashing. (CRC Section R903.2)

7. **Skylights:** Solar PV panels shall maintain a minimum clearance around the perimeter of skylights as not to interfere with the function of the skylight, as determined by the enforcing agency

8. **Plumbing vent, mechanical equipment and mechanical exhaust terminations:** Solar PV panels shall not obstruct or interfere with the function of plumbing vents or mechanical equipment. (CPC Sections 901.1 & 906, CMC Section 304)

PART II: ELECTRICAL CODE REQUIREMENTS

1. **Product listing (certification):** The solar PV panel/module and other equipment used in the PV system shall be listed/certified by a nationally recognized listing/certification agency in accordance with the applicable standards.

2. **Installation:** The installation of the solar PV system must conform to the requirements of the California Electrical Code (CEC).

3. **Signage:** Signage must conform to the requirements of the CEC. Signage requirements and location of certain equipment for solar PV systems may be subject to additional provisions adopted by the enforcing agency.

PART III: LOCAL ELECTRIC UTILITY REQUIREMENTS

Check with the local utility for any incentives, interconnection, operating and metering requirements.

Code Requirements for PV on Buildings other than One- and Two-Family Dwellings

Based on the 2016 California Building Code (CBC), California Residential Code (CRC) and California Energy Code (CEC)

PURPOSE

The purpose of this information bulletin is to clarify requirements of the State Building Standards Codes (Title 24) that pertain to solar PV installations. This bulletin can serve as a reference guide for permit applicants and enforcing agencies to clarify how state code requirements are practically applied in the local jurisdiction. It is intended to minimize permitting uncertainty and differing interpretation regarding specific code requirements for solar PV installations. This information bulletin primarily clarifies requirements pertaining to the California Building Code and the California Residential Code, since these codes in their current form require significant local interpretation. This information bulletin does not address local regulations.

The implementation of uniform standards to achieve the timely and cost-effective installation is consistent with the California Solar Rights Act that views solar installation as a matter of statewide concern and prohibits local jurisdictions from adopting unreasonable barriers to the installation of solar energy systems (CA Government Code Section 65850.5).

PART I: BUILDING AND RESIDENTIAL CODE REQUIREMENTS

1. Definitions

1.1 Solar photovoltaic (PV) system: The total components and subsystems that, in combination, convert solar energy into electric energy suitable for connection to utilization load (CEC Article 100 and Article 690.2).

1.2 Module: A complete, environmentally protected unit consisting of solar cells, optics and other components, exclusive of tracker, designed to generate DC power when exposed to sunlight (CEC Article 690.2).

1.3 Panel: A collection of modules mechanically fastened together, wired and designed to provide a field- installable unit (CEC Article 690.2).

Building integrated photovoltaics (BIPV): Photovoltaic cells, devices, modules or modular materials that are integrated into the outer surface or structure of a building and serve as the outer protective surface of the building (CEC Article 690.2).

1.4.1 Photovoltaic modules/shingles: A roof covering composed of flat-plate photovoltaic modules fabricated in sheets that resemble three-tab composite shingles (CBC Chapter 2, Section 202).

1.5 Alternating-current (AC) module (alternating-current photovoltaic module): A complete, environmentally protected unit consisting of solar cells, optics, inverter and other components, exclusive of tracker, designed to generate AC power when exposed to sunlight (CEC Article 690.2).

1.6 Ballasted photovoltaic system: A roof-mounted system composed of solar photovoltaic panels and supporting members that are unattached or partially attached to the roof and must rely on its weight, aerodynamics and friction to counter the effect of wind and seismic forces (CBC Chapter 16, 1613.6 [1.2]).

2. Solar Ready Requirements

The California Energy Code (Section 110.10) contains mandatory requirements for solar readiness in certain newly constructed single-family and multifamily residences. Although these requirements apply to new construction only, they are briefly outlined here for informational purposes.

2.1 Solar Zone: Subject to certain exceptions outlined in the code, newly constructed homes are required to have an area designated for future solar installations on the roof or overhang of the building, the roof or overhang of another structure located within 250 feet of the building or covered parking installed with the building project. This area must meet certain requirements. The minimum solar zone area must have the following.

2.1.1 Minimum area: The solar zone must be no less than 15 percent of the total roof area of the building excluding any skylight area.

2.1.2 Orientation: All sections of the solar zone located on steep-sloped roofs (defined as a roof whose pitch is greater than 2:12) shall be oriented between 110 degrees and 270 degrees of true north.

2.1.3 Shading: The solar zone must be free of obstructions and may not be shaded by certain obstructions outside the zone (Section 110.10.b.2).

2.2 Documentation: Construction documentation must clearly show the dead and live load for the solar zone. Collateral loads for future solar energy systems do not need to be shown on the construction documents.

Construction documentation must also show pathways for electrical or plumbing interconnections. This includes a location for inverters and metering equipment and a pathway for routing of conduit from the solar zone to the point of interconnection with the electrical service. For single-family residences, the point of interconnection will be the main service panel.

This information must also be provided to the occupant.

2.3 Main Electrical Service Panel

The main electrical service panel shall have a minimum bus bar rating of 200 amps and a marked reserved space for future solar electric installation.

3. Structural Requirements

3.1 PV systems positively anchored to the building

3.1.1 Exemption from structural calculations: The building official may waive the requirement for structural calculations for solar PV installations on top of existing roofs if the official can readily determine that the additional weight of the new solar PV system on the roof does not affect the structural integrity of the building. Some jurisdictions may have a prescriptive approach for when structural calculations can be waived, however, that varies by the enforcing agency.

To help streamline and simplify the permitting process for roof-mounted solar PV systems, it is highly recommended that local jurisdictions develop a prescriptive approach to meeting the structural requirements so that structural calculations are not always required. Some parameters to consider under such prescriptive approach include the following.

- Maximum distributed weight of the solar PV system in PSF
- Maximum perpendicular distance between the solar PV system and the roof below
- Maximum concentrated load imposed by the PV panel support onto the building's roof
- Minimum size and spacing of rafters or joists for portion of the roof that is supporting the solar PV system
- Maximum span of rafters or joists for portion of the roof that is supporting the solar PV system
- Anchoring requirements such as type of fasteners, minimum fastener size, minimum embedment and minimum number of attachment points
- Any limitation on the type of building construction

3.1.2 Structural calculations: When structural calculations are required, calculations shall demonstrate that the primary structure will support the additional vertical and lateral loads from the panels and related equipment.

Note 1: See the appendix to this document for additional guidance on structural calculations.

3.1.2.1 Roof dead load: The weight of solar PV systems shall be considered as dead load in the design of the structure (CBC Section 1606, CRC Section R301.4).

For installation of conventional (not BIPV) solar PV panels on existing roofs, roof live load is not imposed where PV panels occur, provided the clear distance under the panels to top of the roof is less than 42" and provided the roof design is adequate for the concentrated loads from the solar PV panel support frames. See Structural Engineers Association of California (SEAOC) Solar PV-3 Live Load document for additional information.

When the roof live load is allowed to be reduced, consideration should be given to the possibility that a roof may have more than one layer of existing. For pre-1960 wood-framed construction, structural calculations may be based on actual (field-measured) lumber sizes (typically greater than modern lumber sizes), and Douglas fir Grade 1 may be assumed unless field conditions indicate otherwise.

Section 403.3 of the CEBC states, in part, that "Any existing gravity load-carrying structural element for which an addition and its related alterations cause an increase in design gravity load of more than 5 percent shall be strengthened, supplemented, replaced or otherwise altered as needed to carry the increased load required by this code for new structures."

3.1.2.2 Roof live load: Roof live load is not considered in areas covered by roof-mounted panels where there is less than 42" clear under the panels. Roof surfaces not covered by solar PV panels shall be designed for the roof live load (CBC Section 1607, CRC R301.6).

The building official may determine that live load need not be considered for solar PV panels and associated supporting members that are built on grade. Such interpretation is generally based on the assumption that the solar PV panels will not be stepped on or used by anyone to support any live load.

3.1.2.3 Wind design: Calculations shall demonstrate that the solar PV panels and associated supporting members are designed to resist wind loads. For ballasted PV systems, see Section 2.2 of this information bulletin (CBC Section 1609, CRC R301.2.1).

Photovoltaic modules/shingle packaging shall bear a label to indicate compliance with the procedures in ASTM D 3161 and the required classification from CBC Table 1507.2.7.1(2) Classification of Asphalt Shingles Per ASTM D 3161 (CBC Section 1507.2.7.1[2]).

The Structural Engineering Association of California has released a white paper titled "Wind Loads on Low-Profile Solar Photovoltaic Systems on Flat Roofs." View the document **here**.

3.1.2.4 Seismic design: Calculations shall demonstrate that the solar PV panels and associated supporting members are designed to resist earthquake loads. For ballasted PV systems, see Section 2.2 of this information bulletin (CBC Section 1613, CRC 301.2.2).

Note that Section 3404.4 of the CBC states, in part, that "Any existing lateral load-carrying structural element whose demand-capacity ratios with alteration considered is no more than 5 percent greater than its demand-capacity ratio with the alteration ignored shall be permitted to remain unaltered. . . ."

3.1.2.5 For wood construction, supports shall be attached with fasteners of sufficient length and size to achieve minimum required embedment into solid wood taking into consideration the plywood and multiple layers of roofing that may exist, unless otherwise approved by the enforcing agency (ASCE/SEI 7 Section 13.4, CRC Section R301.1.3).

3.1.2.6 Snow load: When applicable, include snow loads and loads from snowdrift (CBC Section 1608, CRC R301.2.3).

3.1.2.7 Requirements for load combinations: The applicable load combinations in CBC 1605 shall be applied to all loading conditions, including evaluating the effects of dead load to counteract wind uplift for ballasted and anchored systems (CBC Section 1605, CRC Section R301.1.3).

3.1.2.8 Alterations, additions and repairs: Sections 403, 404, and 405 of the CEBC shall apply to additions, alterations and repairs associated with PV systems. Roof structural components, their connections, additions, alterations and repairs shall be designed to support the loads from the PV panel support frames

3.1.2.9 The Division of the State Architect (DSA) Interpretation of Regulations Article 16.8, intended for public schools, provides useful code interpretation guidance to non-DSA code officials regarding several types of solar systems, both ground- and roof-mounted.

3.2 Ballasted PV system: PV panels in a ballasted system are typically not attached to the roof and rely on their weight, aerodynamics and friction to counter the effect of wind and seismic forces. In some cases, ballasted systems have few attachment points to supplement the friction forces. Ballasted systems have low ratios of height-to-base width or length, which makes them inherently stable against overturning.

Section 13.4 of ASCE/SEI 7-10 requires that nonstructural components and their supports be attached (or anchored) to the structure. Ballasted solar PV systems are not addressed in the ASCE/SEI 7 and not part of the 2010 CBC.

During the 2012 Triennial Code Adoption Cycle, the Department of Housing and Community Development and the Building Standards Commission proposed an amendment in CBC Section 1613.5, which provides a definition for ballasted photovoltaic systems and allows local governments to approve such systems if they are inclined to accept the weight and friction methodology. Due to the model code changes, the section number for this information was moved to 1613.6. This amendment was developed by the Structural Engineers Association of California – Solar Photovoltaic Systems Committeeand was based on recently approved Item S72-12 at the ICC Code Development Hearing.

This new language, as written, provides building officials with additional criteria under which a ballasted solar system can be permitted.

Note 1: Electrical connections and wiring in a ballasted system should be designed to accommodate movements within the system.

Note 2: The Structural Engineering Association of California is in the process of developing a white paper, titled "Structural Seismic Requirements and Commentary for Rooftop Solar Photovoltaic Systems," addressing the seismic design of ballasted systems. Once available,

a link to the white paper will be included in this document.

3.3 Structural strength of PV panels: The structural strength of solar PV panels is not addressed in the code.

UL 1703, Third Edition, published March 15, 2002, requires that solar PV panels be tested to withstand a superimposed load of 30 PSF. Therefore, all solar PV panels that are listed per UL 1703 are considered to meet this requirement. When used as a building component and depending on the load values that the solar PV panels are subjected to, the enforcing agency may require a test report from an agency recognized by the enforcing agency showing the strength of the solar PV panels.

3.4 Condition of existing roof: Solar PV systems shall not be installed on an existing roof that is deteriorated to the point where it is not adequate as a base. (This interpretation is based on CBC Section 1510 and CRC R907.)

3.5 Premanufactured support systems: Premanufactured support systems must support the PV system and allow the system to stay attached to the structure when exposed to wind, snow or seismic loads. Compliance of the PV support system with appropriate building codes is accomplished through a design specified by a licensed engineer or architect or through research reports from approved sources as defined in CBC Section 1703.4.2. Solar support component manufacturers often provide structural engineering design guidelines, worksheets, code compliance reports and Internet website calculators. The manufacturer's engineering guidelines are intended to ensure that the solar array above the roof and its connection to the roof are code compliant. Additional requirements may be imposed by the enforcing agency (CRC Section R301.1.3, CBC Section 1703.4.2).

4. Fire Safety Provisions

4.1 Fire/roof classification of photovoltaic (PV) panels

4.1.1 Solar PV panels installed on top of a building's roof structure

4.1.1.1 Solar PV systems installed on top of a roof where the space between the solar PV panels and the roof has no use and no potential use are generally considered to be equipment. These solar PV panels/modules shall comply with the minimum fire/roof classification requirements for roof covers as required by CBC Section 1505.

For installations in State Responsibility Areas (SRA) or High Fire Hazard Severity Zones, additional provisions adopted by the local enforcing agency may be applicable. Check with the enforcing agency for any additional requirements.

4.1.1.2 Solar PV panels used as roofing on an independent (stand-alone) structure: Solar PV panels/modules that are designed to be on the roof and span to structural supports, and have a use or occupancy underneath, shall comply with the minimum fire/roof classification requirements for roof covering as required by CRC Section R902. An example of this type of installation is a carport structure having solar PV panels as the roof.

4.1.1.3 Solar PV panels installed as a part of a building's roof structure: Solar PV panels installed as integrated roofing material shall comply with the minimum fire/roof classification requirements for roof covering as required by the current CRC Section R902. An example of this type of installation is PV modules integrated into the roofing shingles (BIPV systems).

4.1.2 Solar PV systems installed on grade: Solar PV panels that are part of a stand-alone, ground-mounted solar PV panel structures, with no use and no potential use underneath are generally considered equipment and therefore the fire/roof classification requirements would not apply. The solar PV panels will require a clear, brush free area of 10 feet around the installation. (Based on the definition of a roof assembly in CRC Section R202/CBC Section 1502.)

4.2 Area, height and story limitations: Where there is a use between the solar PV panels and the roof/grade underneath, adding such solar PV structures may constitute additional floor area, story and/or height. Solar PV panels supported by framing that has sufficient uniformly distributed and unobstructed openings throughout the top of the array (horizontal plane) to allow heat and gases to escape, as determined by the enforcing agency, are generally considered equipment. Provisions relating to solar PV height and area requirements are contained in CBC Section 503 and Table 503.

4.3 Location from property line and adjacent buildings: Solar PV panels and associated framing, with no use and no potential use between the panels and the grade underneath, are generally treated as equipment. When not considered equipment, they may be considered a structure and shall be located and protected based upon the code required fire separation distance to property lines and adjacent buildings (CRC Section R302.1, CBC Section 602).

4.4 Fire proofing of structural support: Depending on the type of building, support structures of solar PV systems that have a use or have potential for use underneath (such as carports) may be required to be fire proofed in accordance with CBC Section 602.

4.4.1 The following installations are generally considered equipment and are not subject to this requirement provided that the structural members are noncombustible.

Stand-alone PV panel structures with no use and no potential use underneath (based on definition of a roof assembly in CBC Section 202).

Solar PV panels supported by framing that has sufficient uniformly distributed and unobstructed openings throughout the top of the array (horizontal plane) to allow heat and gases to escape, as determined by the enforcing agency (based on definition of a roof assembly in CBC Section 202).

4.4.2 Alternate designs can be considered when approved by the enforcing agency as an alternative material, design or method of construction pursuant to CBC Sections 1.2.3, 1.8.7, or 1.11.2.4 asapplicable.

4.5 Rooftop structures: Unenclosed rooftop structures supporting solar PV systems with no use underneath are generally not subject to CBC Section 1509.2.

4.6 Fire sprinklers: In buildings that are required to be provided with fire sprinklers, the CBC requires that all parts of the building have sprinkler coverage except where an exemption is specifically required. See amendments to NFPA section 8.15.7.6 in Chapter 35 of the CBC.

4.6.1 Solar photovoltaic (PV) panels supported by framing that have sufficient uniformly distributed and unobstructed openings throughout the top of the array (horizontal plane) to allow heat and gases to escape, as determined by the enforcing agency, are generally not subject to this requirement (CBC Section 903.3.3).

4.6.2 Solar PV panels placed above the roof, with no use and no potential use between the panels and the roof, are generally not subject to this requirement (based on definition of a roof assembly in CBC Section 1502 and CRC Section R202).

4.6.3 Existing exemptions in the code may be used for a solar PV installation if it meets the intent of the exemption. This will be subject to approval by the enforcingagency.

4.7 Roof Access and Pathways: The installation of solar PV systems must allow for fire department smoke ventilation operations. Roof access point, clear access pathways, solar PV systems spacing and layout must comply with the recruitments outlined in CRC Section R324.

4.8 Markings: The solar PV systems must be marked or labeled in accordance with CRC Section R324 and CEC Article 690. Markings are to be placed every 10 feet and in other areas as required.

4.9 Other fire safety requirements or guidelines: The installation of solar PV systems may be subject to additional provisions adopted by the local enforcing agency. Check with the enforcing agency for additional requirements.

5. **Roof drainage:** Roof-mounted solar PV systems shall not cause excessive sagging of the roof that results in water ponding. They shall also not block or impede drainage flows to roof drains and scuppers. See CBC Section 1503.4 and CRC Section R903.4. CPC Section 1101.11 also applies.

6. **Roof penetrations:** All roof penetrations shall be sealed using approved methods and products to prevent water leakage. Such methods include but not limited to caulking, roof jacks and sheet metal flashing (CBC Section 1503.2, CRC Section R903.2).

7. **Skylights:** Solar PV panels shall maintain a minimum clearance around the perimeter of skylights as not to interfere with the function of the skylight, as determined by the enforcing agency.

8. **Plumbing vent, mechanical equipment and mechanical exhaust terminations:** Solar PV panels shall not obstruct or interfere with the function of plumbing vents or mechanical equipment (CPC Sections 901.1 & 906, CMC Section 304).

9. **Guard rails:** When required by the enforcing agency, guard rails may apply to solar PV systems (CBC Section 1015.6).

10. Disability access requirements

10.1 Nonresidential, hotel, motel buildings, facilities or structures (See CBC Chapter 11B)

10.1.1 Scope: Accessibility to solar PV support structures that create a use or occupancy shall be provided for all occupancy classifications in accordance with Chapter 11B.

10.1.2 General: When alterations, structural repairs or additions are made to existing buildings or facilities for the purpose of installing a solar PV system, they shall comply with Chapter 11B.

Note: New solar PV systems that do not create or expand a use or occupancy and consist only of installation of the solar PV system and related electrical work that does not affect disabled access requirements for existing buildings regulated by Chapter 11B are not considered alterations forthe purpose of accessibility and should not be subject to accessibility upgrades.

10.2 Residential buildings, facilities or structures

10.2.1 Scope: New solar PV systems serving covered multifamily dwellings that create a use or occupancy shall comply with the provisions of Chapter 11A.

10.2.2 Existing buildings: The building standards contained in Chapter 11A do not apply to the installation of solar PV systems serving privately funded multifamily dwellings constructed for first occupancy prior to March 13, 1991.

10.3 Parking: Required accessible parking spaces shall be provided and maintained in accordance with the applicable provisions of Chapter 11A, Sections 1109A and Chapter 11B.

Note: Alterations: Where parking lots, parking structures or parking facilities are re-striped or otherwise altered to accommodate solar PV systems, required accessible parking spaces shall be maintained or shall be provided in accordance with the applicable provisions of Section 1109A and Chapter 11B.

PART II: ELECTRICAL CODE REQUIREMENTS

1. **Product listing (certification):** The solar PV panel/module and other equipment used in the PV system shall be listed/certified by a nationally recognized listing/certification agency in accordance with the applicable standards.

2. **Installation:** The installation of the solar PV system must conform to the requirements of the California Electrical Code (CEC).

3. **Signage:** Signage must conform to the requirements of the (CEC). Signage requirements and location of certain equipment for solar PV systems may be subject to additional provisions adopted by the enforcing agency.

PART III: LOCAL ELECTRIC UTILITY REQUIREMENTS

Check with the local utility for any incentives, interconnection, operating and metering requirements.

Code Requirements for Solar Water Heating (SWH) Systems for One and Two-Family Dwellings

Based on the 2016 California Building Code (CBC), the 2016 California Residential Code (CRC), the 2016 California Plumbing Code (CPC), and the California Electrical Code (CEC).

PURPOSE

The purpose of this information bulletin is to clarify requirements of the State Building Standards Codes (Title 24) that pertain to solar water heating system installations on one- and two-family dwellings. This bulletin can serve as a reference guide for permit applicants and enforcing agencies to clarify how state code requirements are practically applied in the local jurisdiction. It is intended to minimize permitting uncertainty and differing interpretation regarding specific code requirements for solar water heating installations. This information bulletin primarily clarifies requirements pertaining to the California Plumbing Code and the California Electrical Code. This information bulletin does not address local regulations.

The implementation of uniform standards to achieve the timely and cost-effective installation is consistent with the California Solar Rights Act that views solar installation as a matter of statewide concern and prohibits local jurisdictions from adopting unreasonable barriers to the installation of solar energy systems (CA Government Code Section 65850.5).

DEFINITIONS

Control or Controller: A device or group of devices that serves to govern, in some predetermined manner, the electric power delivered to the apparatus to which it is connected. (CEC Section 100)

Indirect-Fired Water Heater: A water heater consisting of a storage tank equipped with an internal or external heat exchanger used to transfer heat from an external source to heat potable water. The storage tank either contains heated potable water or water supplied from an external source, such as a boiler. (CPC 211.0)

PART I: BUILDING AND RESIDENTIAL CODE REQUIREMENTS

1. Solar Ready Requirements

1.1 Single-family residences with a permanently installed solar water heating system meeting the installation criteria specified in the Reference Residential Appendix RA4 and with a minimum solar savings fraction of 0.50 are exempt to Section 110.10 (b) 1A of the California Energy Code that requires a "Solar Zone."

2. Structural Requirements

2.1 See the solar water heating code requirements section of the Solar Permitting Guidebook.

PART II: ELECTRICAL CODE REQUIREMENTS

1.1 The control and pump disconnect(s) must be property installed. (CEC 430 [IX])

1.2 The conductors between the control and power source must be properly installed. (CEC 430 [II])

1.3 The conductors between the control and pump must be properly installed. (CEC 430 [II] and 690 [IV])

1.4 The controller must have an appropriate rating. (CEC 430.83)

PART III: PLUMBING CODE REQUIREMENTS

1. Piping

1.1 All piping must be supported in such a manner that maintains its alignment and prevents sagging. (CPC 313.4)

1.2 Except for necessary valves, where inter-membering or mixing of dissimilar metals occurs, the point of connection must be confined to exposed or accessible locations. (CPC 310.6)

1.3 Piping shall be installed so that connections and piping will not be subject to undue strains or stresses and provisions shall be made for expansion, contraction and structural settlement. No plumbing piping shall be directly embedded in concrete or masonry. No structural member shall be seriously weakened or impaired by cutting, notching or otherwise, as defined in the building code. (CPC 312.2)

1.4 Water piping must have adequate freeze protection. (CPC 312.6)

1.5 Piping must be labeled in accordance with code. (CPC 601.3)

1.6 All pipe, tube, fittings, solvent cements, thread sealants, solders and flux must be in accordance with the California Plumbing Code & NSF 61. (CPC 604.1)

1.7 Any flexible connection to PEX must be more than 18" from tank fittings. Copper or stainless steel flexible connectors shall not exceed 24". Furthermore, PEX-AL-PEX is not adopted for use in potable water supply and distribution systems. (CPC 604.13)

1.8 All systems must comply with the California lead law.

2. Storage Tank

2.1 Indirect-fired water heaters must be labeled in accordance with ASME requirements or an approved testing agency certifying and attesting that such an appliance has been tested, inspected and meets the requirements of the applicable standards or code. (CPC 505.4)

2.2 Heat exchangers used for solar heating shall protect the potable water system from being contaminated by the heat-transfer medium. Double-wall heat exchangers shall separate the potable water from the heat-transfer medium by providing a space between the two walls that are vented to the atmosphere. (CPC 603.5.4)

2.3 A single-wall heat exchanger must utilize either potable water as a heat transfer medium or certain fluids having a toxicity rating or class of 1 or less. (CPC 505.4.1)

2.4 If necessary, systems shall be provided with an over temperature safety protection device in addition to a combination temperature and pressure relief valve that is in accordance with relevant code. (CPC 505.2)

2.5 If necessary, each pressure relief valve shall be an approved automatic type with drain and must be set at a pressure of not more than 150 psi (1034 kPa). No shutoff valve shall be installed between the relief valve and the system or in the drain line. (CPC 608.4)

2.6 Water heaters installed in a garage or in the adjacent living space of a dwelling unit must be installed so that the burners and burner-ignition devices are located not less than 18 inches (457 mm) above the floor unless listed as flammable vapor ignition resistant. (CPC 507.13)

2.7 Water heaters located in an attic, attic-ceiling assembly, floor-ceiling assembly or floor-subfloor require a watertight pan of corrosion-resistant materials to be installed beneath the water heater to specifications. (CPC 507.5)

2.8 Water heaters must be anchored to resist horizontal displacement due to earthquakes as specified. (CPC 507.2)

2.9 Unions must be installed within 12" of tank connections for all piping to and from the tank and heat exchangers. (CPC 609.5)

PART IV: MECHANICAL CODE REQUIREMENTS

1.1 Relief valves must be installed in accordance with code. (CMC 1005.1, CPC 504.6)

1.2 In closed-loop systems, tanks must be properly sized and the system must be designed for a hydrostatic test pressure of 2.5 times the allowable working pressure of the system. (CMC 1004.3, 1004.4)

GLOSSARY

AHJ: Acronym that stands for authority having jurisdiction. AHJ is often used to describe the designated department or agency that enforces certain laws or regulations. It is often used interchangeably with the term enforcing agency.

BIPV: Acronym that stands for building integrated photovoltaics, which is a form of photovoltaic solar energy technology that is integrated into the building envelope to become a part of the roof, skylight or facade.

California Building Standards Commission: State entity that administers California's building codes, including the adoption, approval and publication. They follow a triennial code adoption cycle in which state agencies submit their proposals for code changes.

California Department of Housing and Community Development (HCD): State departmentresponsible for preserving and expanding safe and affordable housing opportunities. HCD develops the buildingstandards that govern construction and maintenance on all forms of housing and ensures that the standards areproperly enforced, identifies California's housing needs and develops policies to meet those needs.

California State Fire Marshal: State office that supports CAL FIRE by focusing on fire prevention through fire prevention engineering, training, education and enforcement.

Contractor: A contractor licensed by the State of California performing work within the scope of their license.

Dead load: The weight of materials of construction incorporated into the building, including but not limited to walls, floors, roofs, ceilings, stairways, built-in partitions, finishes, cladding and other similarly incorporated architectural and structural items and the weight of fixed service equipment, such as cranes, plumbing stacks and risers; electrical feeders; heating, ventilating and air-conditioning systems; and automatic sprinkler systems. Solar water heating system dead load includes collectors (wet) and mounting materials.

Diverter valve: A manual or automatic valve that diverts pool filtration flow into solar collectors when solar-collected energy is available.

Drainback freeze protection: Configuration whereby water is removed from the collectors automatically each night by draining back into a reservoir or the storage tank. Requires careful sloping of tubing and collector risers to ensure total drainage. In solar water heating systems, the solar loop water is separated from the potable water by a one-wall heat exchanger. In solar pool heating systems, the pool water itself drains back into the pool, if piping gradients are continuously sloped to drain.

Enforcement: (As defined in Title 24) A diligent effort to secure compliance, including review of plans and permit applications, response to complaints, citation of violations and other legal process. Except as otherwise provided in this part, "enforcement" may, but need not, include inspections of existing buildings on which no complaint or permit application has been filed and effort to secure compliance as to these existing buildings.

Enforcing agency: The designated department or agency that enforces certain laws or regulations, as specified by statute or regulation. In regard to solar PV installations, this entity is can also be referred to as the "permitting agency," since it is often the entity that issues a permit to allow for solar installations to be constructed.

Forced circulation: Circulation between a storage tank and the collectors by means of a pump.

Forced circulation (recirculation) freeze protection: A method of circulating warm tank water through the collectors when the collector temperature sensor drops below about 41˚F (at this ambient temperature, the water inside the collectors may be close to the freezing temperature). Usually reserved for mild climates and soft water.

Freeze protection: In the context of solar water heating systems, is the method of protecting water in the collector loop from freezing when ambient temperature drops below about 41˚ F.

General plan: A document adopted by a city or county to create a long-term vision to guide the jurisdictions future growth and land use. It includes a statement of development policies and implementing actions to achieve its development objectives.

International Association of Plumbing and Mechanical Officials (IAPMO): National code development organization that publishes codes and standards for California and other states and rates and certifies solar heating collectors and systems.

International Code Council (ICC): National organization that publishes a complete family of building codes used in many states, including the building, residential and energy codes used in California.

Live load: Those loads produced by the use and occupancy of the building or other structure and do not include construction or environmental loads such as wind load, snow load, rain load, earthquake load, flood load or dead load.

Photovoltaic: A method of generating electrical power by converting solar radiation (sunlight) into direct current electricity using semiconductors.

Pool filtration turnover rate: The amount of time in hours required to filter one pool volume. Some AHJs may require three or four turnovers per day. Solar installers should show by calculations that the addition of a solar system won't add so much resistance to flow that filtration rate is affected. It may be necessary to add a solar booster pump to ensure no degradation of filtration rate.

Qualified person: One who has the required state license and has proper skills and knowledge related to the construction and operation of the electrical equipment and installations and has received safety training to recognize and avoid the hazards involved.

Solar domestic water heating (SDWH) system: Collectors and system components that comprise a solar heating system that preheats domestic water to be boosted to a required domestic hot water temperature.

Solar photovoltaic system: The total components and subsystems that, in combination, convert solar energy into electric energy suitable for connection to utilization load.

Solar pool heating (SPH) system: Collectors and system components that comprise a solar heating system that supplies all heated water for swimming pool comfort.

Solar water heating (SWH) system: In this context is either a SDWH or SPH system.

Solar Rating and Certification Corporation (SRCC): National organization that publishes renewable energy standards and rates and certifies solar thermal collectors and systems. SRCC is a member of the ICC family of companies (see "International Code Council").

Stagnation: The condition where no fluid flow exists in a collector to remove thermal energy. On very hot days the fluid temperature can reach 300˚– 400˚F when there is no flow. Systems must be designed to accommodate maximum stagnation temperatures without damage and without creating an unsafe condition.

Title 24: The section of the California Code of Regulations that governs the design and construction of all buildings and associated facilities and equipment in California.

Toxicity (of heat transfer fluid): Used in reference to heat transfer fluid such as propylene glycol in solar water heating systems. The California Plumbing Code refers to the Gosselin toxicity rating method to determine whether certain cross-connection prevention measures (such as double-walled heat exchangers) must be used. Pure propylene glycol (without chemical additives) is Class 1, essentially nontoxic, while the addition of chemical additives can result in greater toxicity. As per CPC 505.4.1, heat transfer fluid classified as Gosselin Class 1 is required to use a one-wall heat exchanger.

ADDITIONAL RESOURCES

Alternative Energy Equipment and Systems Marking and Application Guide Underwriters Laboratories (UL) publishes the ***Alternative Energy Equipment and Systems Marking and Application Guide***. The guide provides application and UL product category information for PV systems, thermal solar systems, fuel cells and hydrogen generators, engine generators, microturbines and wind turbine generating systems. This guide is available online and can be found in Appendix A of the most recent *UL White Book*.

Assessment of Overheat & Freeze Protection Mechanisms
Created by the Solar Rating and Certification Corporation (SRCC), the ***Assessment of Overheat & Freeze Protection Mechanism*** provides a review of various methods of protecting solar systems from freeze damage and protecting heat transfer fluids from damage caused by extreme collector temperatures in no-flow conditions.

California Solar Initiative Incentives
This website provides information about state incentives offered for solar installations. Most incentives allocated for PV installations have been exhausted, but incentives remain for new construction homes and solar thermal installations.

California Solar Energy Industries Association (CALSEIA)
CALSEIA provides a ready-made forum for public agencies to communicate with contractors and/or seek feedback on changes to local permitting requirements or processes. Local chapters of CALSEIA exist throughout the state.

Center for Sustainable Energy (CSE)
CSE provides implementation expertise and training to public agencies on solar permitting. CSE is the statewide awardee of the Department of Energy's Rooftop Solar Challenge, a component of the SunShot Initiative. Template permitting documents and AB 2188 Implementation Guide are available **here**.

Energy Aware Planning Guide
Developed by the California Energy Commission, the ***Energy Aware Planning Guide*** is a comprehensive resource for local governments seeking to reduce energy use, improve energy efficiency and increase adoption of renewable energy across all sectors. The guide presents a menu of strategies and best management practices to help local governments improve energy efficiency, reduce energy consumption through transportation and land use and enhance renewable sources of energy.

Energy Aware Facility Siting and Permitting Guide
Developed by the California Energy Commission, the ***Energy Aware Facility Siting and Permitting Guide*** assists local governments with developing general plan energy and transmission elements and provides guidance on utility-scale electricity generation and transmission planning and permitting. The guide discusses the increasing role of local governments in energy planning and permitting, describes the energy regulations and policies (both federal and state) and planning processes that define future electricity generation and transmission needs, and identifies opportunities for local government involvement in electricity infrastructure planning and permitting.

Expedited Permit Process for PV System
Recommendations developed for the Solar American Board for Codes and Standards (Solar ABCs) by Bill Brooks, P.E., Brooks Engineering. This **document** outlines a standardized review process for small-scale PV systems.

Guidelines for Roof-Mounted Photovoltaic System Installations
Developed by the National Roofing Contractors Association (NRCA), this document provides the latest best practices for PV roof systems, including information about new energy code requirements applicable to rooftop PV systems. This valuable technical resource is complemented by figures displaying proper photovoltaic system installation, helpful references and a topic-specific glossary.

Incentive and Interconnection Information
Following are web links to information on major utilities' interconnection rules and procedures.

International Association of Plumbing and Mechanical Officials (IAPMO) Solar Product Certification Listings
IAPMO's **website** provides listings and performance ratings of solar collectors and systems that meet the certification criteria established for the CSI-Thermal Program.

Los Angeles Department of Water and Power (LADWP) Pacific Gas and

Electric (PG&E)
- **Standard Net Energy Metering** (includes links to Interconnection forms)

Sacramento Municipal Utility District (SMUD) San

Diego Gas and Electric (SDG&E) Southern California

Edison (SCE)
- **Net Metering FAQs**
- **Net Energy Metering Interconnection Handbook**

On the Use of PEX in Drainback Systems
Created by the Solar Rating and Certification Corporation (SRCC), the ***Policy on the Use of PEX in Drainback Systems*** provides recommendations on the appropriate conditions where cross-linked polyethylene (PEX) piping can be used successfully in drainback systems.

Sharing Success — Emerging Approaches to Efficient Rooftop Solar Permitting Published by the Interstate Renewable Energy Council (IREC) in May 2012, this **report** outlines innovative strategies being implemented across the U.S. to help increase the efficiency of permitting procedures for rooftop solar systems.

Solar America Board for Codes and Standards (Solar ABCs)
Solar ABCs is a collaborative effort funded by the Department of Energy. This entity publishes several helpful reports and recommendations, including a permit streamlining guideline.

Solar Energy Facilities Permit Streamlining Guide
A **guide** produced by the California County Planning Directors Association (CCPDA) to help counties facilitate development of solar energy facilities. The guide describes the laws and regulations applying to solar energy facilities, points to consider regarding solar energy development and lists current procurement and incentive programs for renewable energy. The guide also provides a model ordinance regarding solar energy facilities and further outlines policy options and guidance for counties regarding solar energy.

Solar Instructor Training Network
The Solar Instructor Training Network (SITN) promotes high-quality training in the installation of solar technologies. Nine regional resource and training providers support the professional development of trainers and instructors of solar PV and solar heating and cooling technologies across the country. The **Interstate Renewable Energy Council** (IREC) became the national administrator of the Solar Instructor Training Network in 2010. IREC also provides several guides and checklists on permitting best practices.

Solar Rating and Certification Corporation (SRCC) Certification Listings
The **SRCC website** provides a listing of solar thermal collectors certified to its OG-100 collector rating program and solar thermal systems certified to its OG-300 system rating program. Certification listings provide performance data and system configuration information needed for incentive programs and code enforcement. The SRCC website also provides free access to all SRCC standards.

Structural Technical Appendix for Residential Rooftop Solar Installations
A detailed description of the structural engineering principles and assumptions behind Toolkit Document 5, Structural Criteria for Residential Rooftop Solar Energy Installations. This Appendix delineates how the document conforms to the California Residential Code and California Building Code and also discusses options that jurisdictions may want to consider in implementing Toolkit Document 5. Additionally, the
Technical Appendix offers guidance to address some nonconforming items, such as when an anchor layout is not based on a solar support component manufacturer's guidelines or when a dwelling is located within 200 yards of the ocean (Wind Exposure D).

California Solar Rights Act: A Review of the Statutes and Relevant Cases
The Energy Policy Initiatives Center at the University of San Diego School of Law has produced this detailed analysis of the California Solar Rights Act. This review details the evolution of the act since its passage in the late 1970s. A series of court cases, detailed in this **document**, have shaped how the act is applied and practiced throughout the state.

Governor's Office of Planning and Research
Office of Governor Edmund G. Brown Jr.